2025 Z900 ABS

PARTS DIAGRAM

Rear Fender(s)

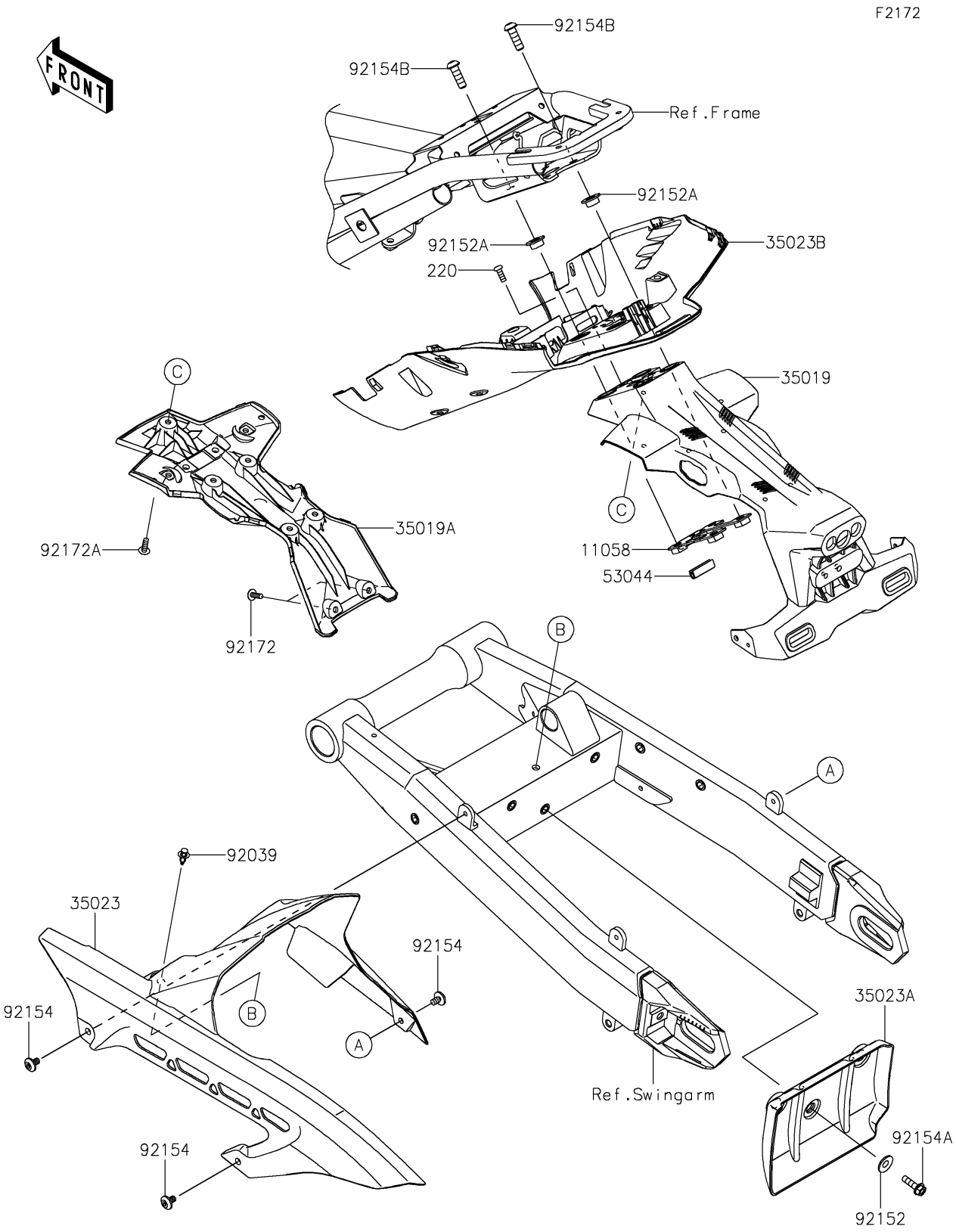

© 2026 Kawasaki Motors Corp., U.S.A.

2025 Z900 ABS

PARTS LIST

Rear Fender(s)

ITEM NAME	PART NUMBER	QUANTITY
BRACKET,FLAP (Ref # 11058)	11058-1601	1
FLAP,UPP (Ref # 35019)	35019-0702	1
FLAP,LWR (Ref # 35019A)	35019-0703	1
FENDER-REAR,INNER (Ref # 35023)	35023-0421	1
FENDER-REAR,INNER,LWR (Ref # 35023A)	35023-0432	1
FENDER-REAR (Ref # 35023B)	35023-0511	1
TRIM,9X6.5X30 (Ref # 53044)	53044-0632	1
RIVET (Ref # 92039)	92039-0086	1
COLLAR,6.8X20X4.6 (Ref # 92152)	92152-2432	3
COLLAR (Ref # 92152A)	92152-2959	4
BOLT,SOCKET,6X10 (Ref # 92154)	92154-2667	3
BOLT,FLANGED,6X22 (Ref # 92154A)	92154-4287	3
BOLT,SOCKET,8X25 (Ref # 92154B)	92154-4432	4
SCREW,TAPPING,5X14 (Ref # 92172)	92172-0265	2
SCREW,TAPPING,5X16 (Ref # 92172A)	92172-1685	7
SCREW-PAN-CROS,5X14 (Ref # 220)	220AB0514	1

© 2026 Kawasaki Motors Corp., U.S.A.