2025 Z900 ABS

PARTS DIAGRAM

Footrests

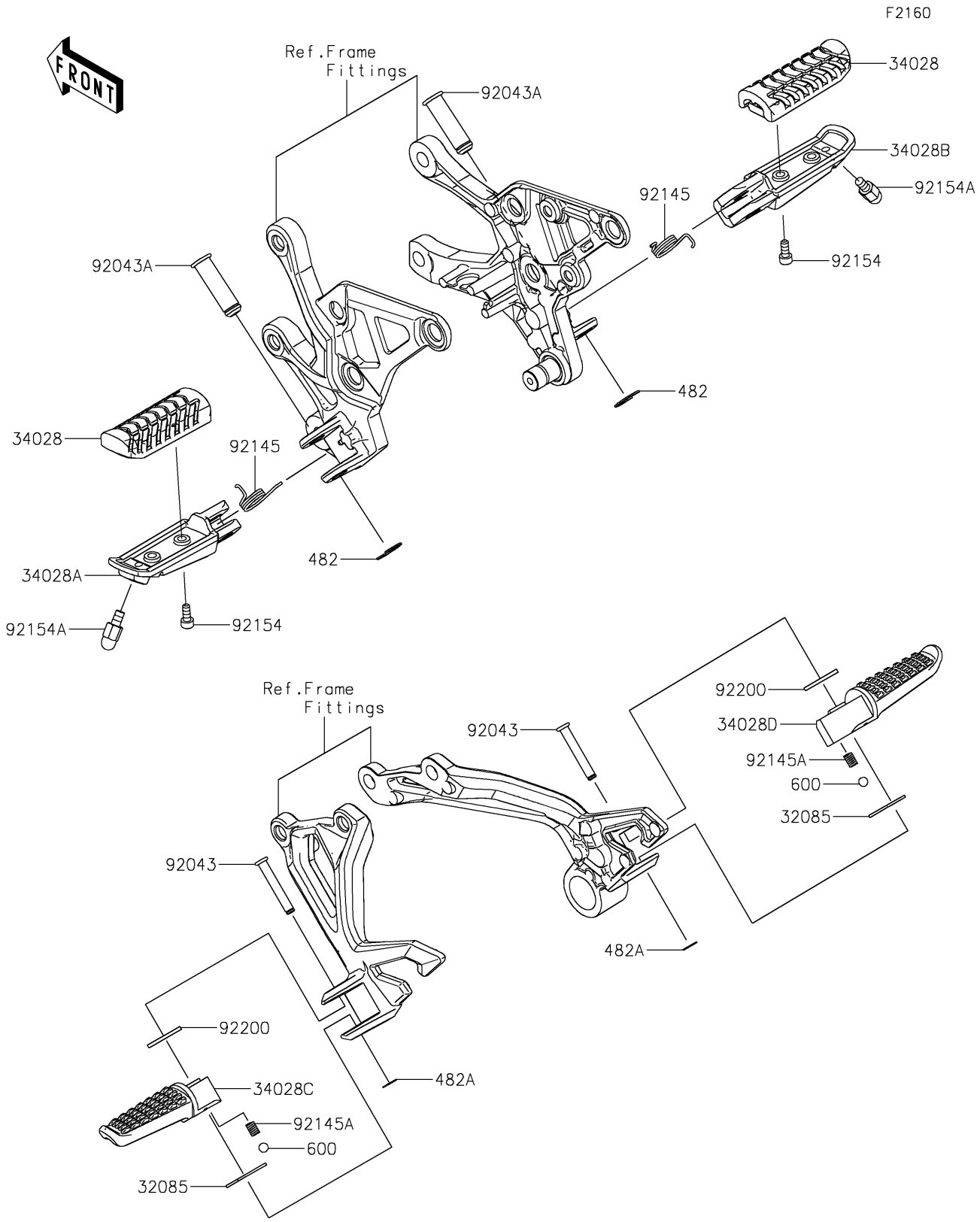

© 2026 Kawasaki Motors Corp., U.S.A.

2025 Z900 ABS

PARTS LIST

Footrests

ITEM NAME	PART NUMBER	QUANTITY
STOPPER (Ref # 32085)	32085-0801	2
STEP,RUBBER (Ref # 34028)	34028-0349	2
STEP,FR,LH (Ref # 34028A)	34028-0350	1
STEP,FR,RH (Ref # 34028B)	34028-0351	1
STEP,RR,LH (Ref # 34028C)	34028-0366	1
STEP,RR,RH (Ref # 34028D)	34028-0367	1
PIN,6X40 (Ref # 92043)	92043-0200	2
PIN,12X42.5 (Ref # 92043A)	92043-1746	2
SPRING,STEP RETURN (Ref # 92145)	92145-0723	2
SPRING (Ref # 92145A)	92145-1319	2
BOLT,SOCKET,5X12 (Ref # 92154)	92154-0503	4
BOLT,BANK SENSOR (Ref # 92154A)	92154-0838	2
WASHER,16X26X2.3 (Ref # 92200)	92200-0043	2
CIRCLIP-TYPE-E,10MM (Ref # 482)	482EA0100	2
CIRCLIP-TYPE-E (Ref # 482A)	482EA5000	2
BALL-STEEL,1/4 (Ref # 600)	600A0800	2

© 2026 Kawasaki Motors Corp., U.S.A.