2025 Z900 ABS

PARTS DIAGRAM

Crankcase

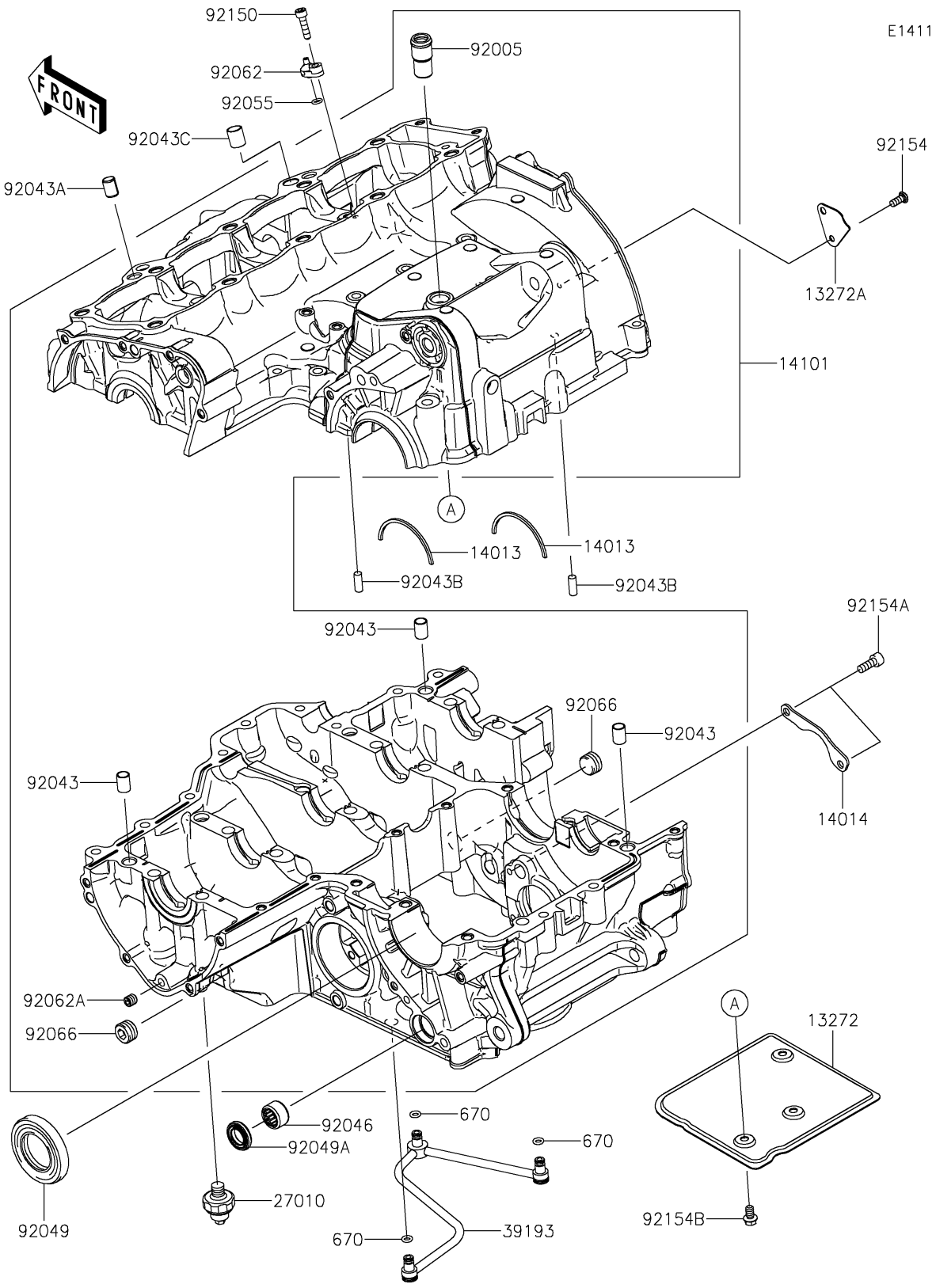

© 2026 Kawasaki Motors Corp., U.S.A.

2025 Z900 ABS

PARTS LIST

Crankcase

ITEM NAME	PART NUMBER	QUANTITY

© 2026 Kawasaki Motors Corp., U.S.A.