2023 KLR®650

PARTS DIAGRAM

Accessory(Frame Slider)

F2910



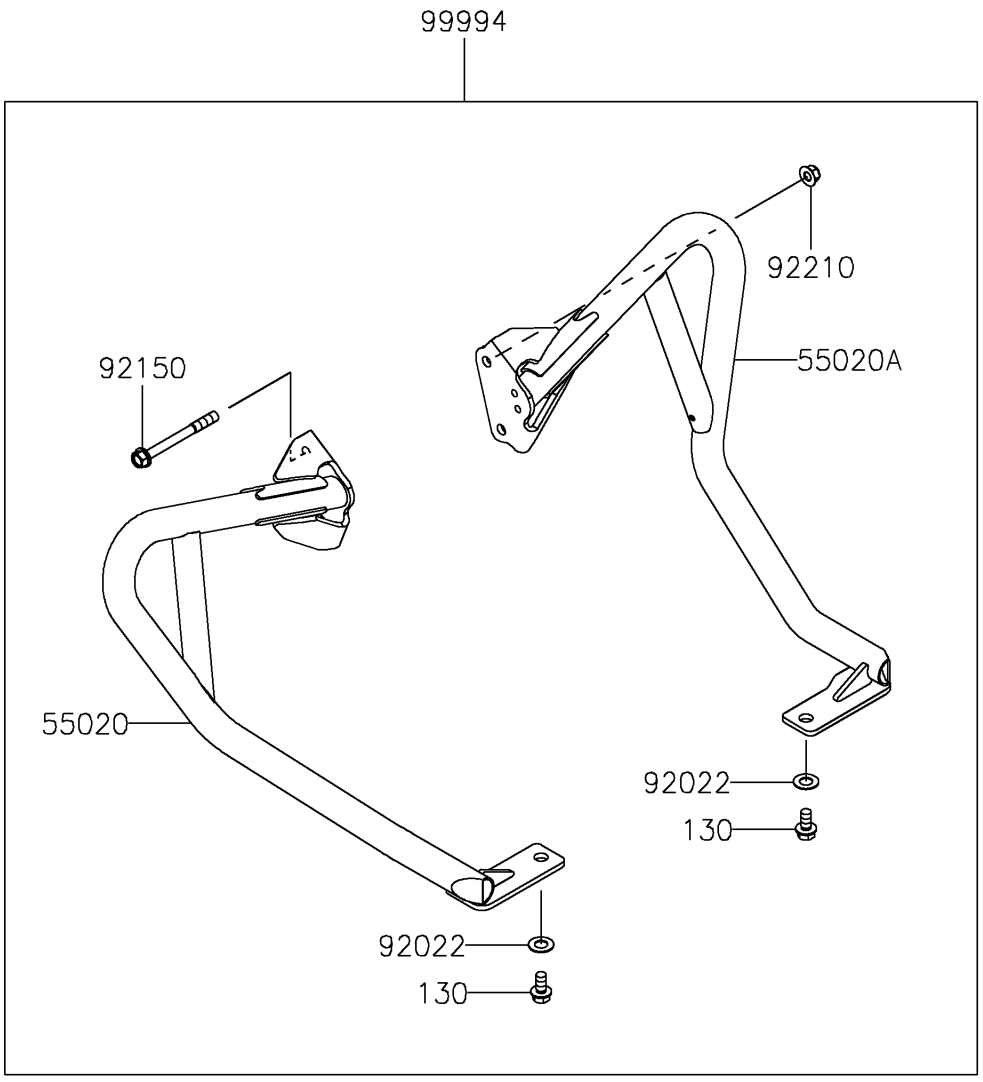

© 2026 Kawasaki Motors Corp., U.S.A.

2023 KLR®650

PARTS LIST

Accessory(Frame Slider)

ITEM NAME	PART NUMBER	QUANTITY

© 2026 Kawasaki Motors Corp., U.S.A.