2023 KLR®650

PARTS DIAGRAM

Labels

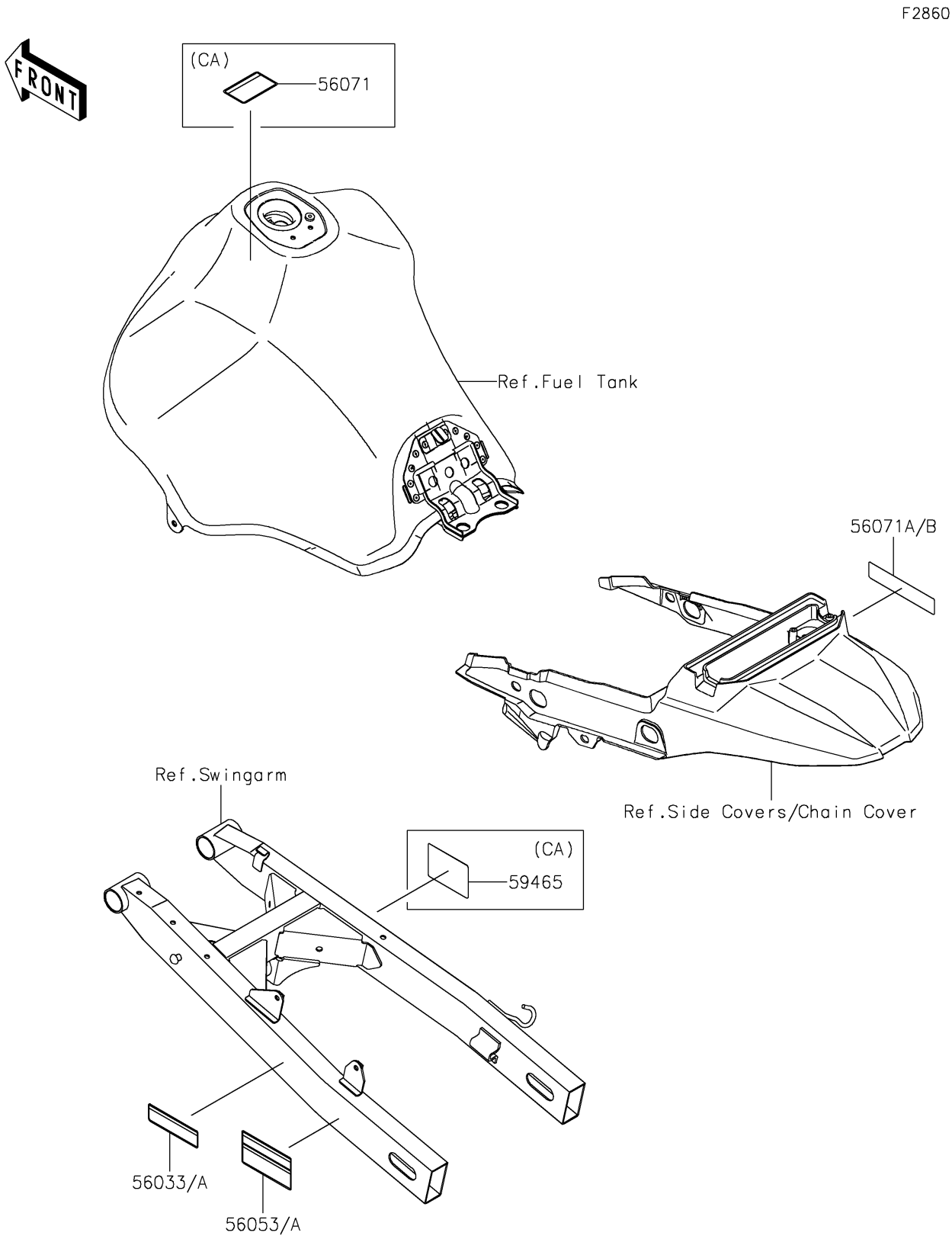

© 2026 Kawasaki Motors Corp., U.S.A.

2023 KLR®650

PARTS LIST

Labels

ITEM NAME	PART NUMBER	QUANTITY
LABEL-MANUAL,CHAIN (Ref # 56033)	56033-1478	1
LABEL-MANUAL,CHAIN (Ref # 56033A)	56033-1479	1
LABEL-SPECIFICATION,TIRE&LOAD (Ref # 56053)	56053-1837	1
LABEL-SPECIFICATION,TIRE&LOAD (Ref # 56053A)	56053-1838	1
LABEL-WARNING,EVAPO (Ref # 56071)	56071-0158	1
LABEL-WARNING,CARRIER LOADING (Ref # 56071A)	56071-1044	1
LABEL-WARNING,CARRIER LOADING (Ref # 56071B)	56071-1045	1
LABEL-CERTIFICATION,EVAPO (Ref # 59465)	59465-7733	1

© 2026 Kawasaki Motors Corp., U.S.A.