2025 KLR650

PARTS DIAGRAM

Frame Fittings

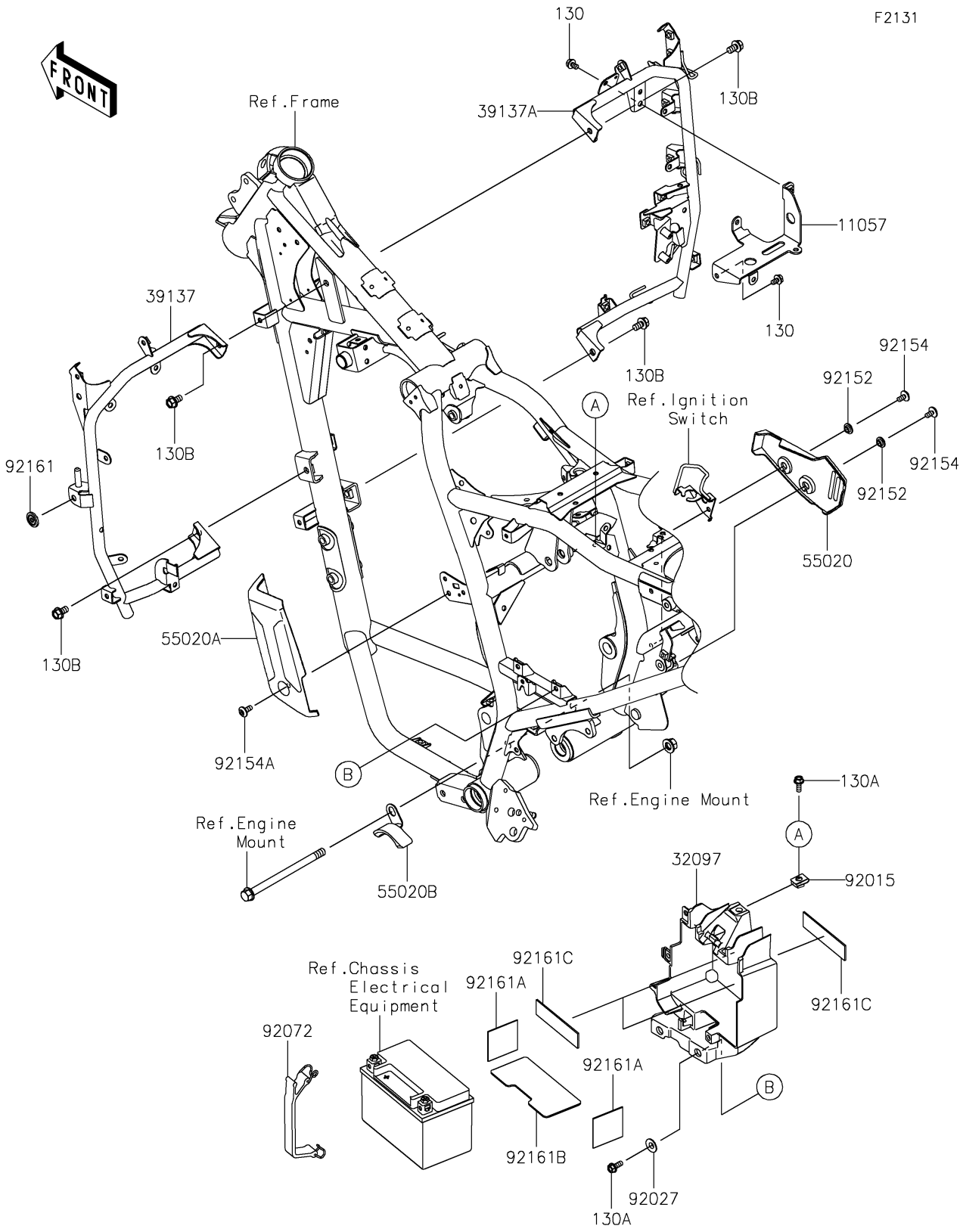

© 2026 Kawasaki Motors Corp., U.S.A.

2025 KLR650

PARTS LIST

Frame Fittings

ITEM NAME	PART NUMBER	QUANTITY
BRACKET,ABS UNIT (Ref # 11057)	11057-7886	1
CASE-BATTERY (Ref # 32097)	32097-0565	1
STAY-COMP,LH (Ref # 39137)	39137-0710	1
STAY-COMP,RH (Ref # 39137A)	39137-0711	1
GUARD,HEEL (Ref # 55020)	55020-2330	1
GUARD (Ref # 55020A)	55020-2335	1
GUARD,CHAIN (Ref # 55020B)	55020-2390	1
NUT,6MM (Ref # 92015)	92015-1671	1
COLLAR (Ref # 92027)	92027-1794	2
BAND,BATTERY (Ref # 92072)	92072-0839	1
COLLAR,6.3X9.5X4.1 (Ref # 92152)	92152-1571	2
BOLT,SOCKET,6X12 (Ref # 92154)	92154-2706	2
BOLT,SOCKET,6X14 (Ref # 92154A)	92154-4285	1
DAMPER,8X22X10 (Ref # 92161)	92161-1685	1
DAMPER,60X140X1 (Ref # 92161A)	92161-1868	2
DAMPER,BATTERY (Ref # 92161B)	92161-2353	1
DAMPER,25X100X2 (Ref # 92161C)	92161-2354	3
BOLT-FLANGED,6X10 (Ref # 130)	130BA0610	2
BOLT-FLANGED,6X16 (Ref # 130A)	130BA0616	3
BOLT-FLANGED,8X14 (Ref # 130B)	130BA0814	4

© 2026 Kawasaki Motors Corp., U.S.A.