2023 KLR®650

PARTS DIAGRAM

Oil Pump

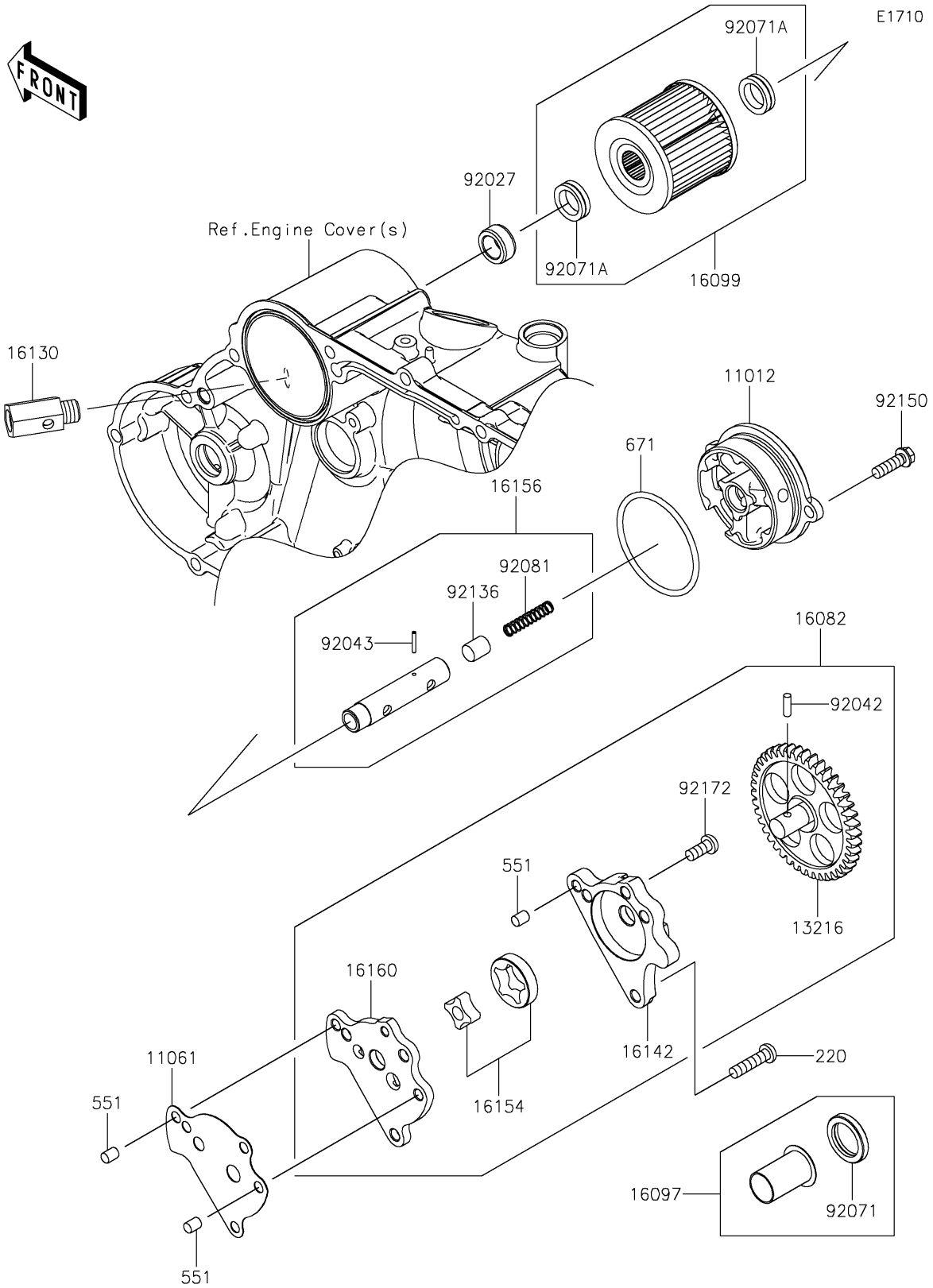

© 2026 Kawasaki Motors Corp., U.S.A.

2023 KLR®650

PARTS LIST

Oil Pump

ITEM NAME	PART NUMBER	QUANTITY
CAP,OIL FILTER (Ref # 11012)	11012-1538	1
GASKET,OIL PUMP (Ref # 11061)	11061-0430	1
GEAR-COMP,OIL PUMP (Ref # 13216)	13216-1146	1
PUMP-ASSY-OIL (Ref # 16082)	16082-1088	1
FILTER-ASSY-OIL (Ref # 16097)	16097-1001	1
ELEMENT-OIL FILTER (Ref # 16099)	16099-004	1
VALVE-ASSY-RELIEF (Ref # 16130)	16130-1063	1
COVER-PUMP (Ref # 16142)	16142-1078	1
ROTOR-PUMP (Ref # 16154)	16154-1008	1
PISTON-ASSY,VALVE,BY-PASS (Ref # 16156)	16156-002	1
BODY (Ref # 16160)	16160-1137	1
COLLAR,13X20X9 (Ref # 92027)	92027-1695	1
PIN,DOWEL,4X12.8 (Ref # 92042)	92042-041	1
PIN,SPRING,2.2X13.5 (Ref # 92043)	92043-123	1
GROMMET,OIL STRAINER (Ref # 92071)	92071-100	1
GROMMET,OIL FILTER (Ref # 92071A)	92071-101	2
SPRING,PISTON (Ref # 92081)	92081-043	1
VALVE (Ref # 92136)	92136-002	1
BOLT,6X20 (Ref # 92150)	92150-1010	2
SCREW,6X14 (Ref # 92172)	92172-0273	1
SCREW-PAN-CROS,6X25 (Ref # 220)	220AA0625	3
PIN-DOWEL,6X8 (Ref # 551)	551A0608	3
O RING,55MM (Ref # 671)	671B2555	1

© 2026 Kawasaki Motors Corp., U.S.A.