2025 KLR650

PARTS DIAGRAM

Accessory(Frame Slider)

F2910

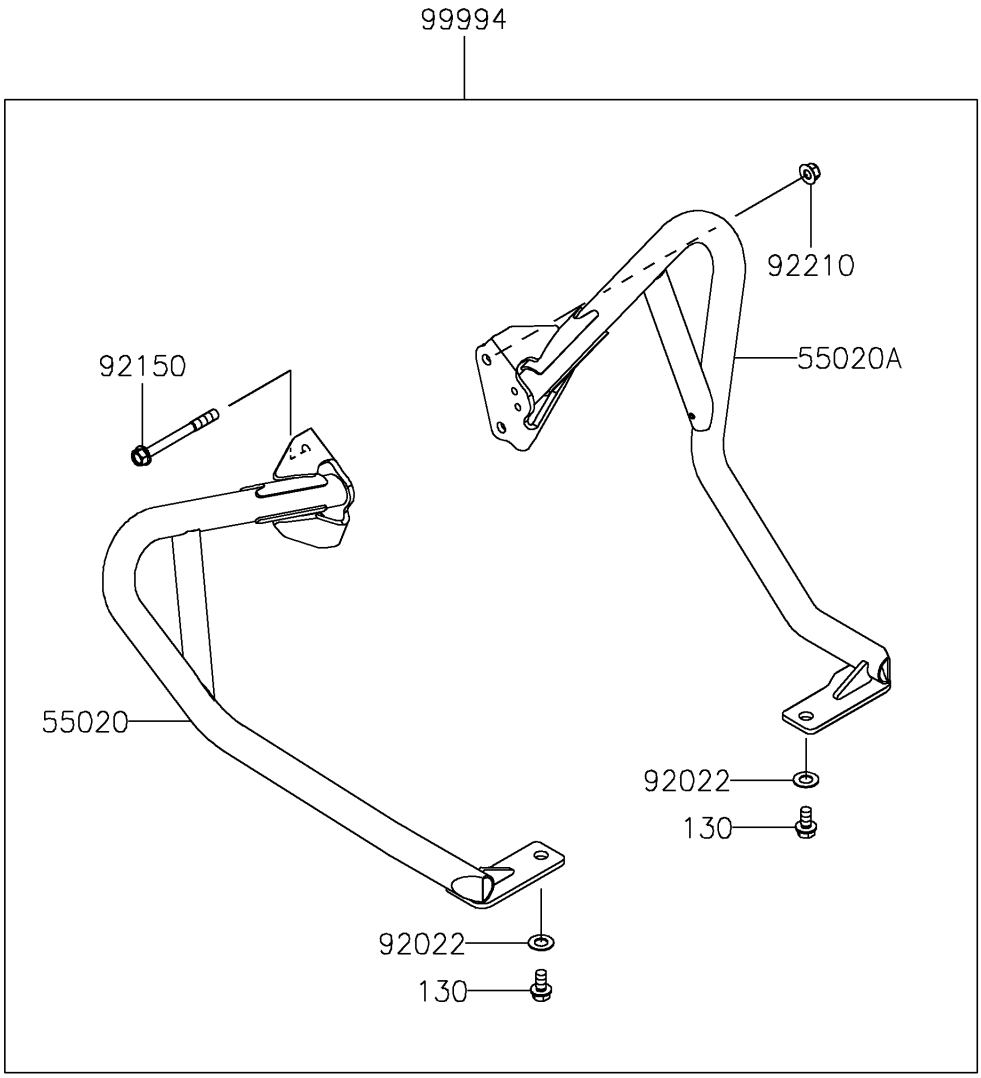

© 2026 Kawasaki Motors Corp., U.S.A.

2025 KLR650

PARTS LIST

Accessory(Frame Slider)

ITEM NAME	PART NUMBER	QUANTITY
GUARD,LH (Ref # 55020)	55020-2341	1
GUARD,RH (Ref # 55020A)	55020-2342	1
WASHER,10.5X20X1 (Ref # 92022)	92022-239	2
BOLT,8X80 (Ref # 92150)	92150-1162	2
NUT,FLANGED,LOCK,8MM (Ref # 92210)	92210-0159	2
FRAME SLIDER (Ref # 99994)	99994-1497	1
BOLT-FLANGED,8X16 (Ref # 130)	130CA0816	2

© 2026 Kawasaki Motors Corp., U.S.A.