2025 KLR650

PARTS DIAGRAM

Rear Fender(s)

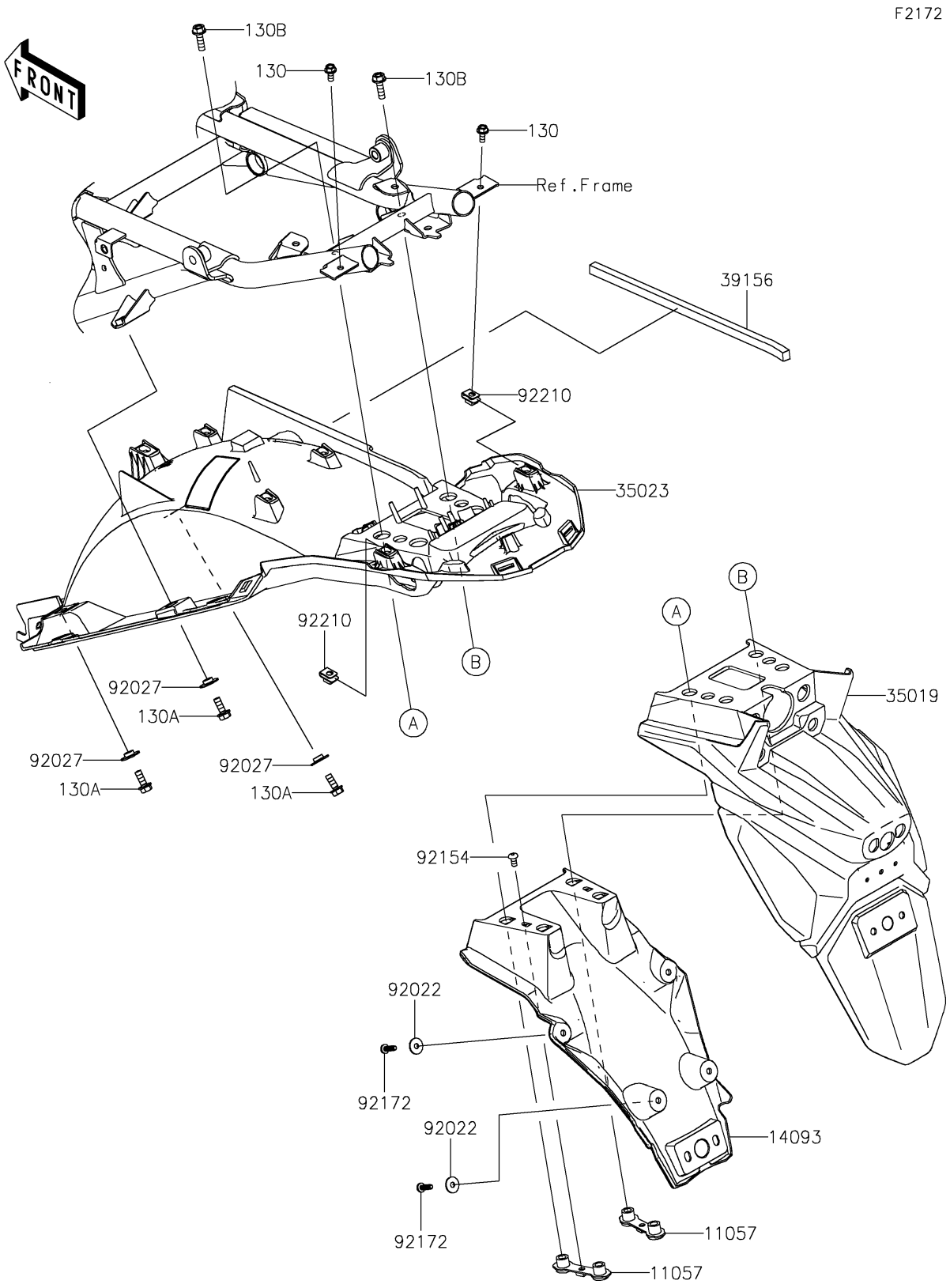

© 2026 Kawasaki Motors Corp., U.S.A.

2025 KLR650

PARTS LIST

Rear Fender(s)

ITEM NAME	PART NUMBER	QUANTITY
BRACKET (Ref # 11057)	11057-0556	2
COVER,FLAP (Ref # 14093)	14093-1086	1
FLAP (Ref # 35019)	35019-0683	1
FENDER-REAR (Ref # 35023)	35023-0479	1
PAD,10X8X280 (Ref # 39156)	39156-2662	1
WASHER,5.2X16X1.2 (Ref # 92022)	92022-263	4
COLLAR (Ref # 92027)	92027-1794	3
BOLT,SOCKET,5X10 (Ref # 92154)	92154-1547	2
SCREW,TAPPING,5X16 (Ref # 92172)	92172-0790	4
NUT,PLATE,5MM (Ref # 92210)	92210-0935	2
BOLT-FLANGED,5X12 (Ref # 130)	130BA0512	2
BOLT-FLANGED,6X16 (Ref # 130A)	130BA0616	3
BOLT-FLANGED,6X20 (Ref # 130B)	130BA0620	4

© 2026 Kawasaki Motors Corp., U.S.A.