# 2023 KLR®650

## PARTS DIAGRAM

### Rear Fender(s)

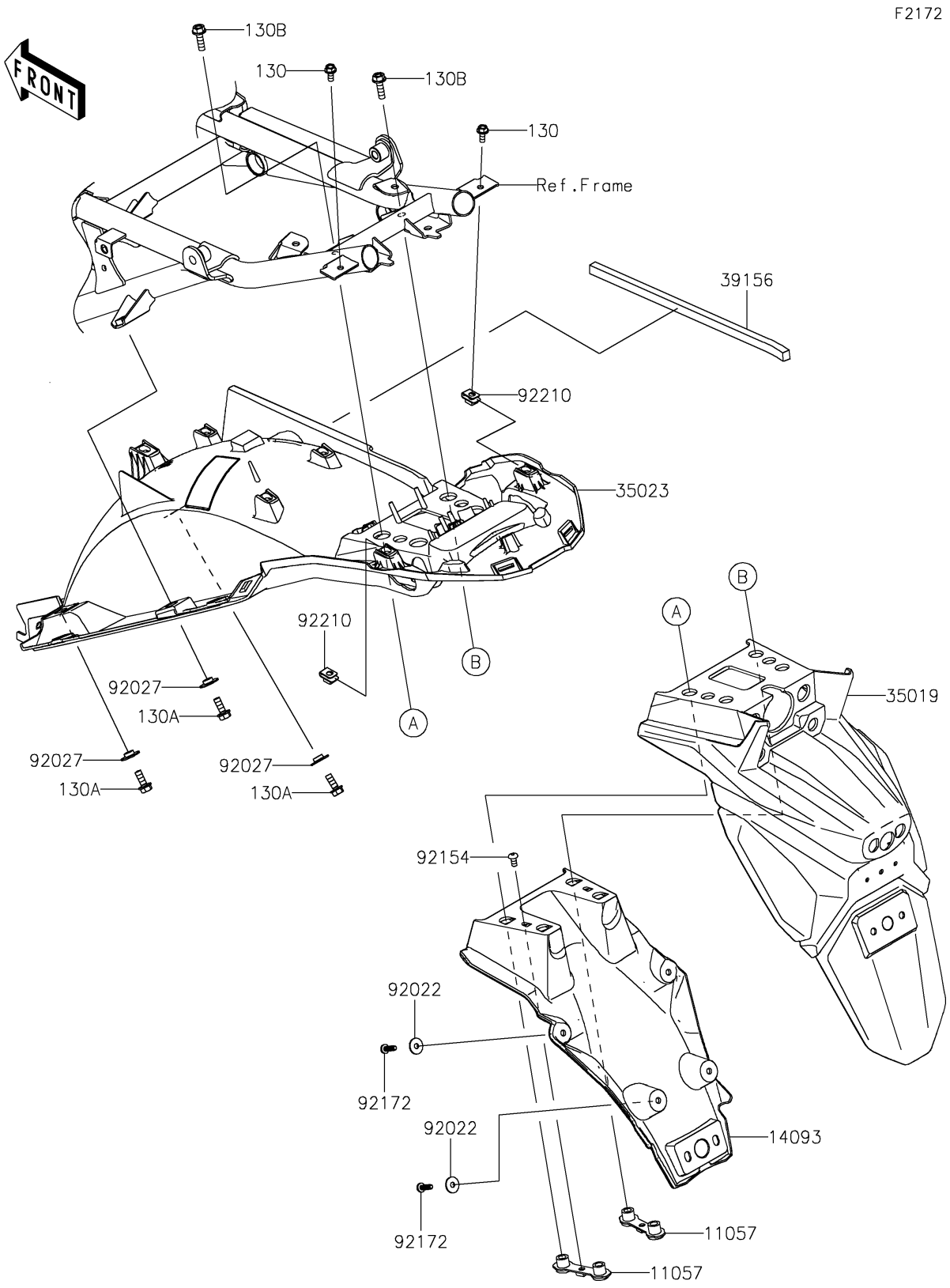


© 2026 Kawasaki Motors Corp., U.S.A.

# 2023 KLR®650

## PARTS LIST

### Rear Fender(s)

Kawasaki
Let the Good Times Roll®

| ITEM NAME | PART NUMBER | QUANTITY |
|---|---|---|
| BRACKET (Ref # 11057) | 11057-0556 | 2 |
| COVER,FLAP (Ref # 14093) | 14093-1086 | 1 |
| FLAP (Ref # 35019) | 35019-0683 | 1 |
| FENDER-REAR (Ref # 35023) | 35023-0479 | 1 |
| PAD,10X8X280 (Ref # 39156) | 39156-2662 | 1 |
| WASHER,5.2X16X1.2 (Ref # 92022) | 92022-263 | 4 |
| COLLAR (Ref # 92027) | 92027-1794 | 3 |
| BOLT,SOCKET,5X10 (Ref # 92154) | 92154-1547 | 2 |
| SCREW,TAPPING,5X16 (Ref # 92172) | 92172-0790 | 4 |
| NUT,PLATE,5MM (Ref # 92210) | 92210-0935 | 2 |
| BOLT-FLANGED,5X12 (Ref # 130) | 130BA0512 | 2 |
| BOLT-FLANGED,6X16 (Ref # 130A) | 130BA0616 | 3 |
| BOLT-FLANGED,6X20 (Ref # 130B) | 130BA0620 | 4 |

© 2026 Kawasaki Motors Corp., U.S.A.