2023 KLR®650

PARTS DIAGRAM

Gear Change Drum/Shift Fork(s)

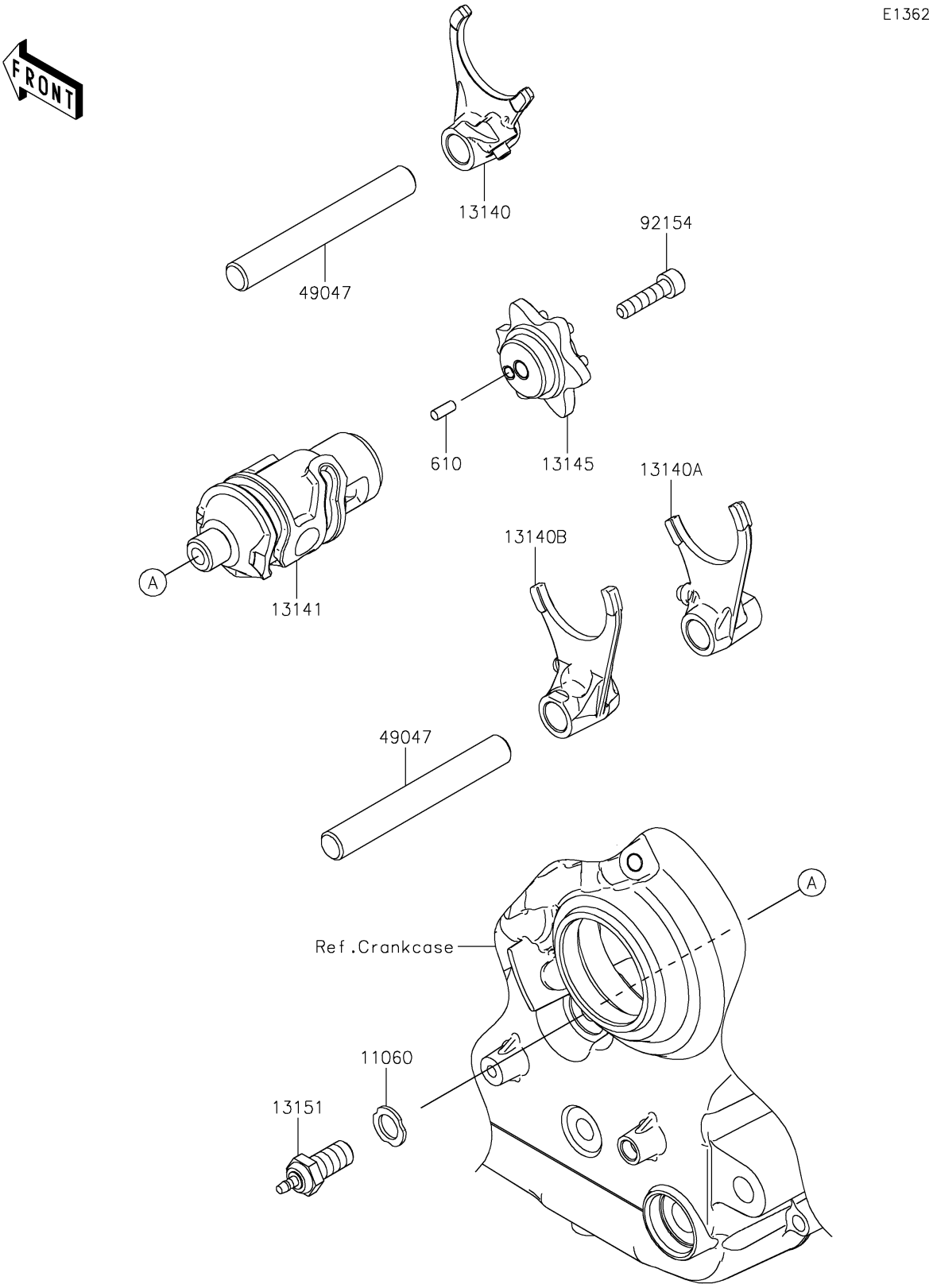

© 2026 Kawasaki Motors Corp., U.S.A.

2023 KLR®650

PARTS LIST

Gear Change Drum/Shift Fork(s)

ITEM NAME	PART NUMBER	QUANTITY
GASKET,10.5X16X1.5 (Ref # 11060)	11060-1676	1
FORK-SHIFT (Ref # 13140)	13140-0694	1
FORK-SHIFT,LOW (Ref # 13140A)	13140-1023	1
FORK-SHIFT,2ND&3RD (Ref # 13140B)	13140-1024	1
DRUM-CHANGE (Ref # 13141)	13141-0613	1
CAM-CHANGE DRUM (Ref # 13145)	13145-0050	1
SWITCH-COMP (Ref # 13151)	13151-0559	1
ROD-SHIFT,L=93.7 (Ref # 49047)	49047-0039	2
BOLT,SOCKET,6X25 (Ref # 92154)	92154-0477	1
ROLLER,4X10 (Ref # 610)	610A0410	1

© 2026 Kawasaki Motors Corp., U.S.A.