2023 KLR®650

PARTS DIAGRAM

Muffler(s)

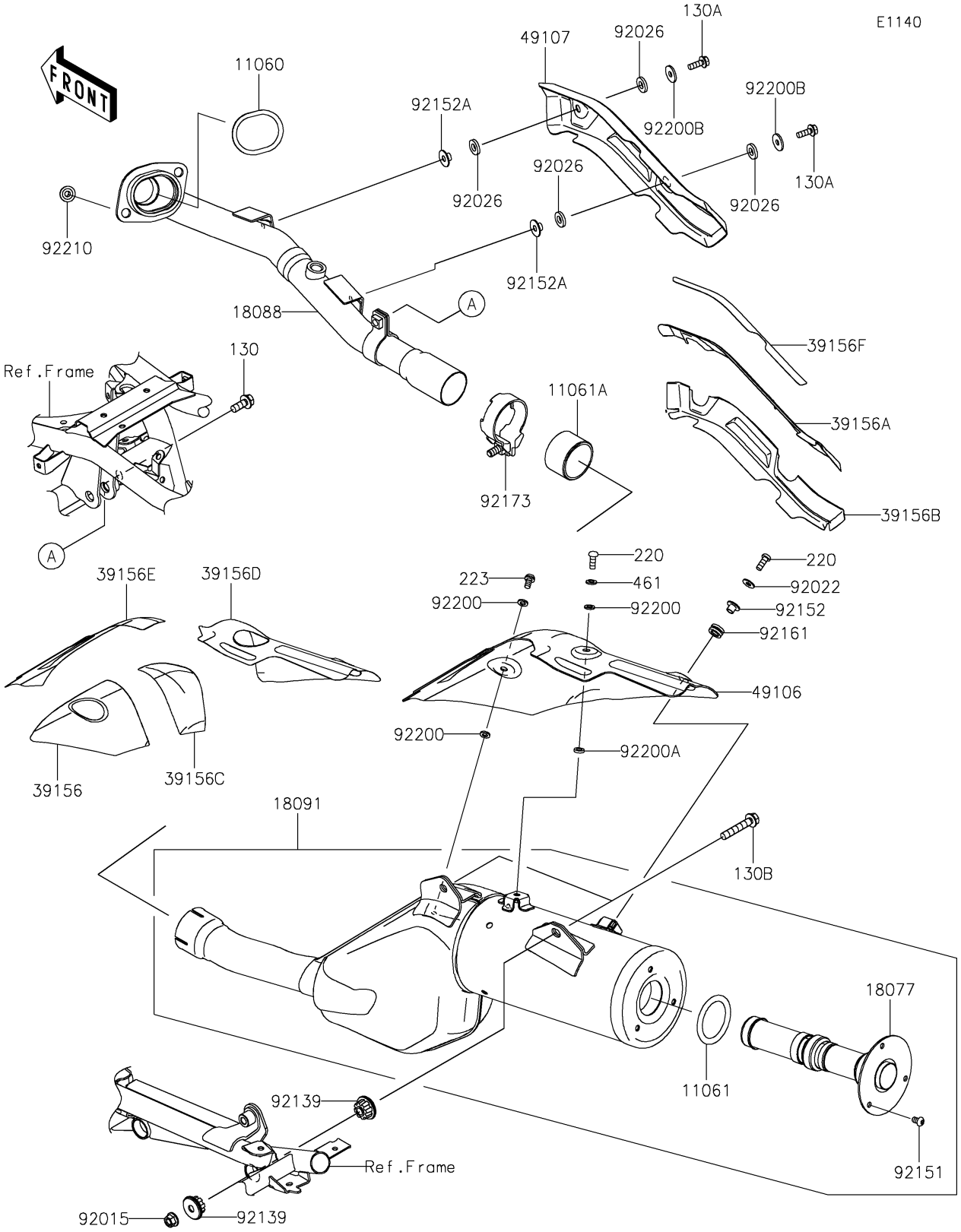

© 2026 Kawasaki Motors Corp., U.S.A.

2023 KLR®650

PARTS LIST

Muffler(s)

Kawasaki
Let the Good Times Roll®

ITEM NAME	PART NUMBER	QUANTITY
GASKET,EXHAUST PIPE HOLDER (Ref # 11060)	11060-1108	1
GASKET (Ref # 11061)	11061-1345	1
GASKET,EXHAUST PIPE CONNECTING (Ref # 11061A)	11061-1411	1
ARRESTER-SPARK (Ref # 18077)	18077-0050	1
PIPE-EXHAUST (Ref # 18088)	18088-1665	1
BODY-COMP-MUFFLER (Ref # 18091)	18091-1268	1
PAD,MUFFLER COVER,FR (Ref # 39156)	39156-2693	1
PAD,EXHAUST PIPE COVER,CNT (Ref # 39156A)	39156-2698	1
PAD,EXHAUST PIPE COVER,LWR (Ref # 39156B)	39156-2699	1
PAD,MUFFLER COVER,CNT (Ref # 39156C)	39156-2738	1
PAD,MUFFLER COVER,RR (Ref # 39156D)	39156-2773	1
PAD,MUFFLER COVER,UPP (Ref # 39156E)	39156-2774	1
PAD,EXHAUST PIPE COVER,UPP (Ref # 39156F)	39156-2798	1
COVER-MUFFLER (Ref # 49106)	49106-0857	1
COVER-EXHAUST PIPE (Ref # 49107)	49107-0849	1
NUT,8MM (Ref # 92015)	92015-1402	2
WASHER,6.2X15X1.2 (Ref # 92022)	92022-2373	1
SPACER,8.7X18X3 (Ref # 92026)	92026-0919	4
BUSHING (Ref # 92139)	92139-1116	4
BOLT,SOCKET,6X10 (Ref # 92151)	92151-1449	3
COLLAR (Ref # 92152)	92152-2837	1
COLLAR (Ref # 92152A)	92152-2862	2
DAMPER (Ref # 92161)	92161-2434	1
CLAMP (Ref # 92173)	92173-2463	1
WASHER,6.2X11.5X1.5 (Ref # 92200)	92200-2496	3
WASHER,6.2X11.5X2.5 (Ref # 92200A)	92200-2511	1
WASHER,6.5X20X2 (Ref # 92200B)	92200-2529	2
NUT,8MM (Ref # 92210)	92210-1114	2
BOLT-FLANGED,8X20 (Ref # 130)	130BD0820	1

© 2026 Kawasaki Motors Corp., U.S.A.

2023 KLR®650

PARTS LIST

Muffler(s)

ITEM NAME	PART NUMBER	QUANTITY
BOLT-FLANGED,6X18 (Ref # 130A)	130CB0618	2
BOLT-FLANGED (Ref # 130B)	130CC0845	2
SCREW-PAN-CROS,6X16 (Ref # 220)	220AB0616	2
SCREW-PAN-WS-CROS,6X12 (Ref # 223)	223AB0612	1
WASHER-SPRING,6MM (Ref # 461)	461DB0600	1

© 2026 Kawasaki Motors Corp., U.S.A.