2024 KLR®650 ADVENTURE ABS

PARTS DIAGRAM

Brake Pedal

F2260

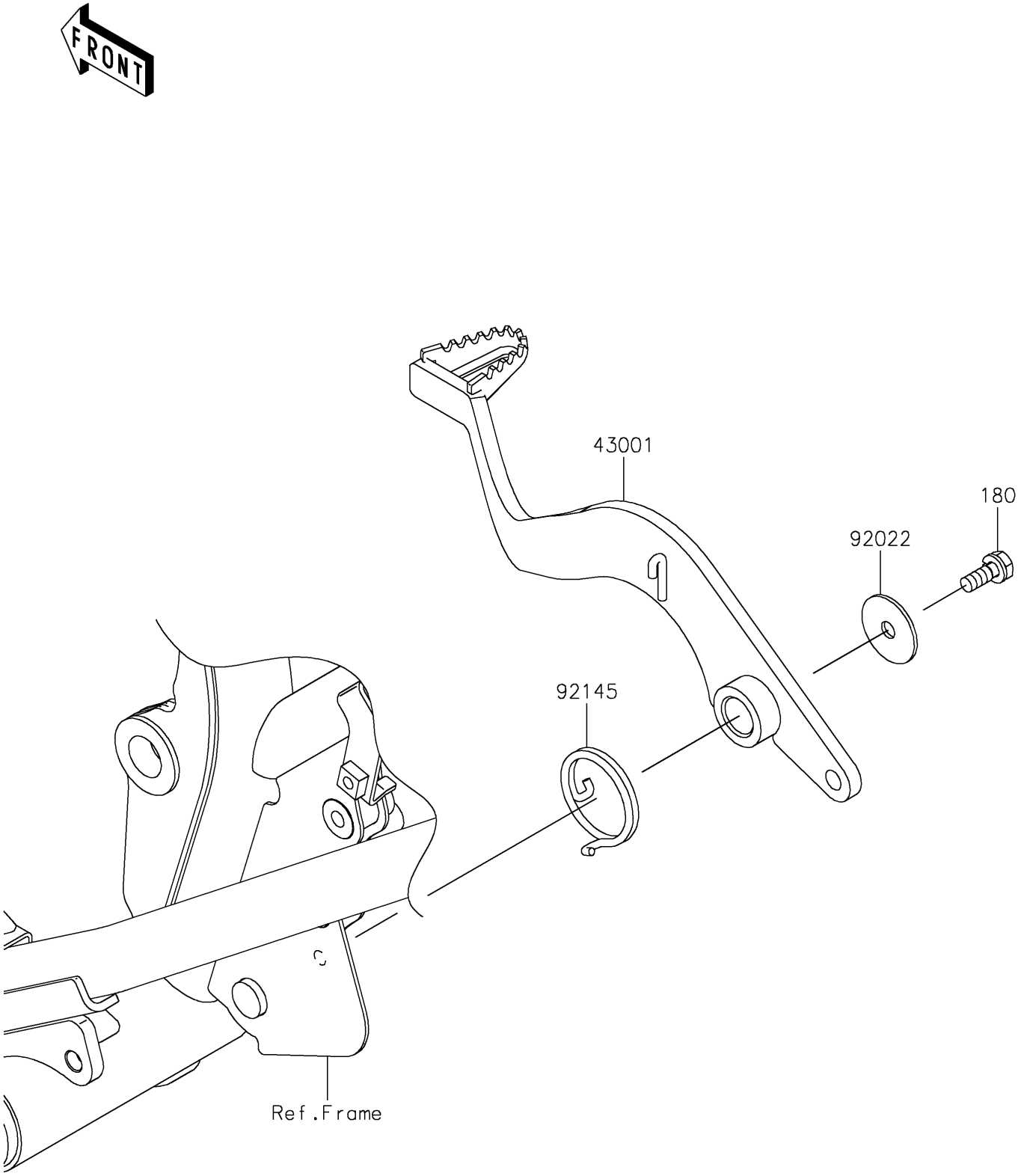

© 2026 Kawasaki Motors Corp., U.S.A.

2024 KLR®650 ADVENTURE ABS

PARTS LIST

Brake Pedal

ITEM NAME	PART NUMBER	QUANTITY
LEVER-BRAKE,PEDAL (Ref # 43001)	43001-0777	1
WASHER,7X28X1.6 (Ref # 92022)	92022-1282	1
SPRING,RETURN (Ref # 92145)	92145-0807	1
BOLT-UPSET-WS,6X16 (Ref # 180)	180BA0616	1

© 2026 Kawasaki Motors Corp., U.S.A.