2023 KLR®650 Adventure ABS

PARTS DIAGRAM

Footrests

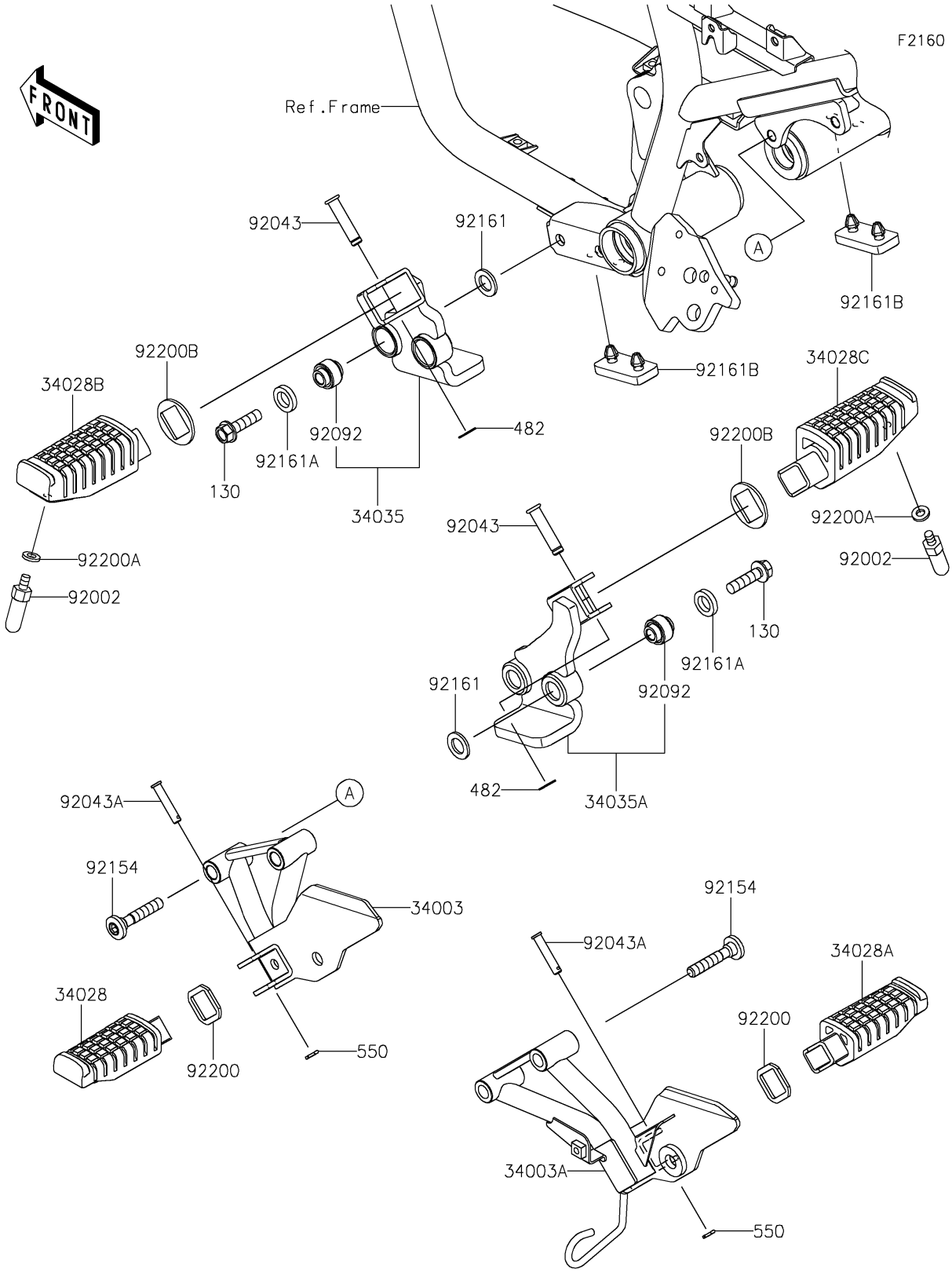

© 2026 Kawasaki Motors Corp., U.S.A.

2023 KLR®650 Adventure ABS

PARTS LIST

Footrests

ITEM NAME	PART NUMBER	QUANTITY
HOLDER-STEP,RR,LH,F.S.BLACK (Ref # 34003)	34003-0185-18R	1
HOLDER-STEP,RR,RH,F.S.BLACK (Ref # 34003A)	34003-0194-18R	1
STEP,RR,LH (Ref # 34028)	34028-0134	1
STEP,RR,RH (Ref # 34028A)	34028-0135	1
STEP,FR,LH (Ref # 34028B)	34028-0402	1
STEP,FR,RH (Ref # 34028C)	34028-0403	1
HOLDER-ASSY-STEP,FR,LH (Ref # 34035)	34035-0003	1
HOLDER-ASSY-STEP,FR,RH (Ref # 34035A)	34035-0004	1
BOLT,BANK SENSOR (Ref # 92002)	92002-1995	2
PIN,8X36.5 (Ref # 92043)	92043-1339	2
PIN,6X28 (Ref # 92043A)	92043-1464	2
BUSHING-RUBBER,8.4X20X18 (Ref # 92092)	92092-0039	4
BOLT,SOCKET,8X44 (Ref # 92154)	92154-4427	4
DAMPER,12.5X21X2 (Ref # 92161)	92161-0943	4
DAMPER,12.5X20X4 (Ref # 92161A)	92161-0944	4
DAMPER (Ref # 92161B)	92161-2391	2
WASHER,RR STEP (Ref # 92200)	92200-0561	2
WASHER,6.5X13X2.0 (Ref # 92200A)	92200-0562	2
WASHER,FR STEP (Ref # 92200B)	92200-2537	2
BOLT-FLANGED,8X30 (Ref # 130)	130CA0830	4
CIRCLIP-TYPE-E (Ref # 482)	482EA7000	2
PIN-COTTER,2.0X15 (Ref # 550)	550AA2015	2

© 2026 Kawasaki Motors Corp., U.S.A.