2024 TERYX KRX® 1000 TRAIL EDITION

Kawasaki
Let the Good Times Roll®

PARTS DIAGRAM

Rear Hubs/Brakes

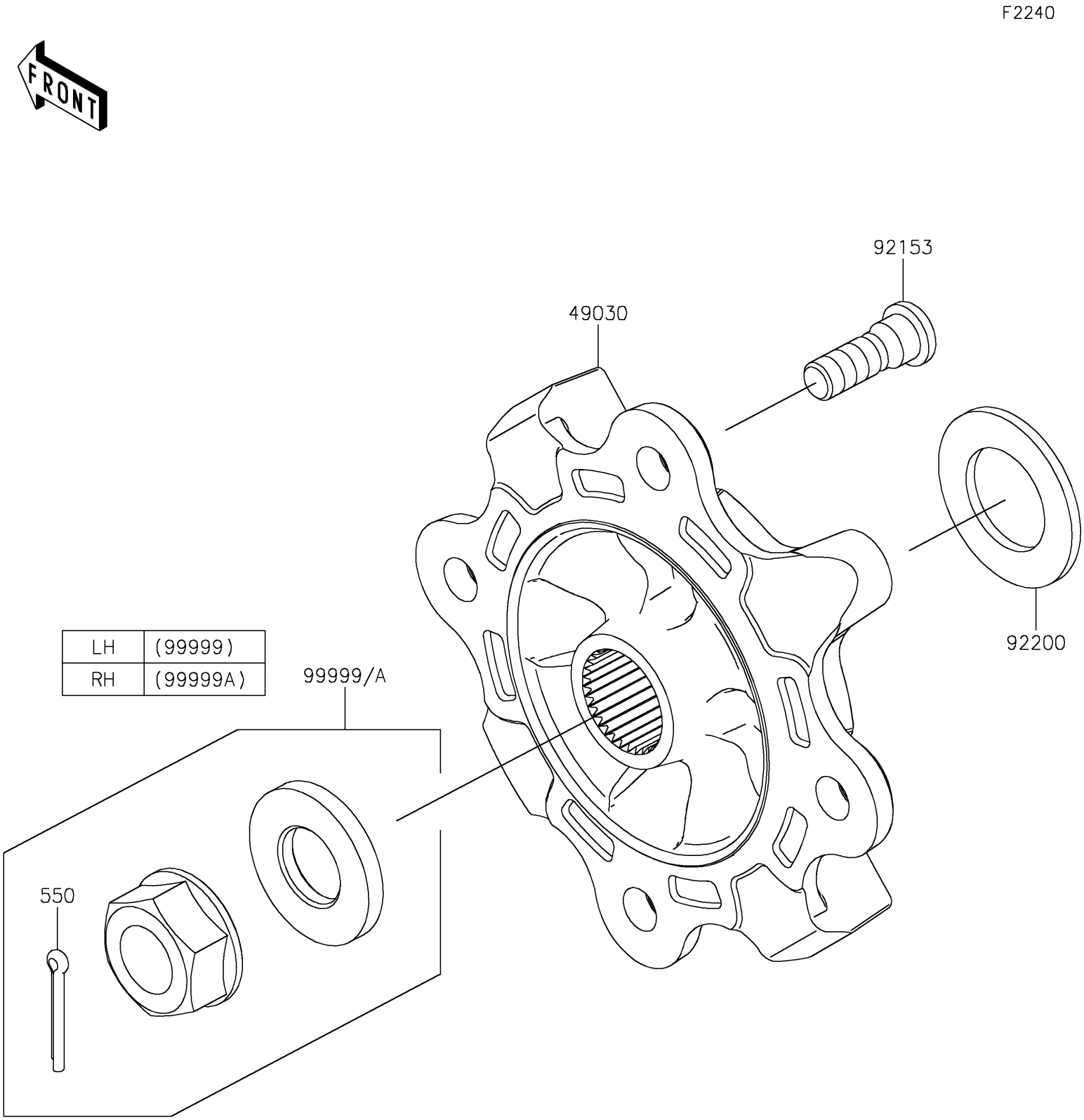

LH	(99999)
RH	(99999A)

© 2026 Kawasaki Motors Corp., U.S.A.

2024 TERYX KRX® 1000 TRAIL EDITION

Kawasaki
Let the Good Times Roll®

PARTS LIST

Rear Hubs/Brakes

ITEM NAME	PART NUMBER	QUANTITY

© 2026 Kawasaki Motors Corp., U.S.A.