2024 TERYX KRX® 1000 TRAIL EDITION

Kawasaki
Let the Good Times Roll®

PARTS DIAGRAM

Frame Fittings(Rear)

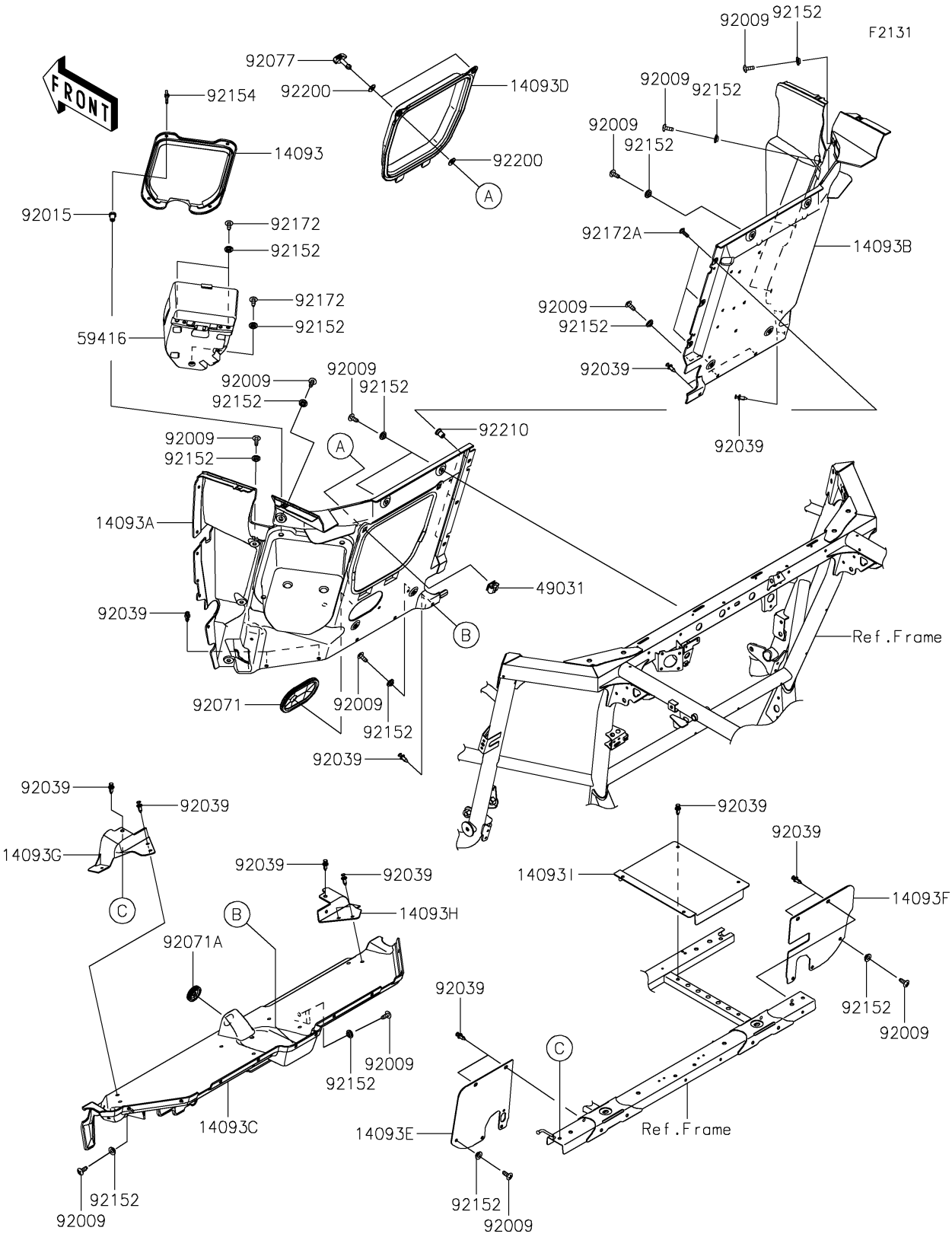

© 2026 Kawasaki Motors Corp., U.S.A.

2024 TERYX KRX® 1000 TRAIL EDITION

Kawasaki
Let the Good Times Roll®

PARTS LIST

Frame Fittings(Rear)

ITEM NAME	PART NUMBER	QUANTITY
COVER,ELECTRIC-CASE (Ref # 14093)	14093-0821	1
COVER,SEAT-BACK-PANEL,LH (Ref # 14093A)	14093-0840	1
COVER,SEAT-BACK-PANEL,RH (Ref # 14093B)	14093-0841	1
COVER,SEAT-BACK-PANEL,LWR (Ref # 14093C)	14093-0842	1
COVER,A/C-BOX (Ref # 14093D)	14093-0843	1
COVER,BATTERY (Ref # 14093E)	14093-0853	1
COVER,FUEL-TANK (Ref # 14093F)	14093-0854	1
COVER,SEAT-BACK,LH (Ref # 14093G)	14093-0992	1
COVER,SEAT-BACK,RH (Ref # 14093H)	14093-0993	1
COVER,SEAT,LWR (Ref # 14093I)	14093-1006	1
LATCH,A/C-BOX (Ref # 49031)	49031-0022	2
CASE-ELECTRIC (Ref # 59416)	59416-0028	1
SCREW,TAPPING,6X16 (Ref # 92009)	92009-1166	24
NUT,RUBBER,6MM (Ref # 92015)	92015-1692	4
RIVET (Ref # 92039)	92039-0776	24
GROMMET (Ref # 92071)	92071-0789	1
GROMMET (Ref # 92071A)	92071-0791	1
KNOB (Ref # 92077)	92077-0030	2
COLLAR,6.3X9.5X4.1 (Ref # 92152)	92152-1571	27
BOLT,WING,6X25 (Ref # 92154)	92154-4116	4
SCREW,6X16 (Ref # 92172)	92172-0284	3
SCREW,5MM (Ref # 92172A)	92172-0292	3
WASHER (Ref # 92200)	92200-0503	4
NUT,WELL,5MM (Ref # 92210)	92210-0370	3

© 2026 Kawasaki Motors Corp., U.S.A.