2023 Teryx KRX® 1000 Trail Edition

PARTS DIAGRAM

Radiator

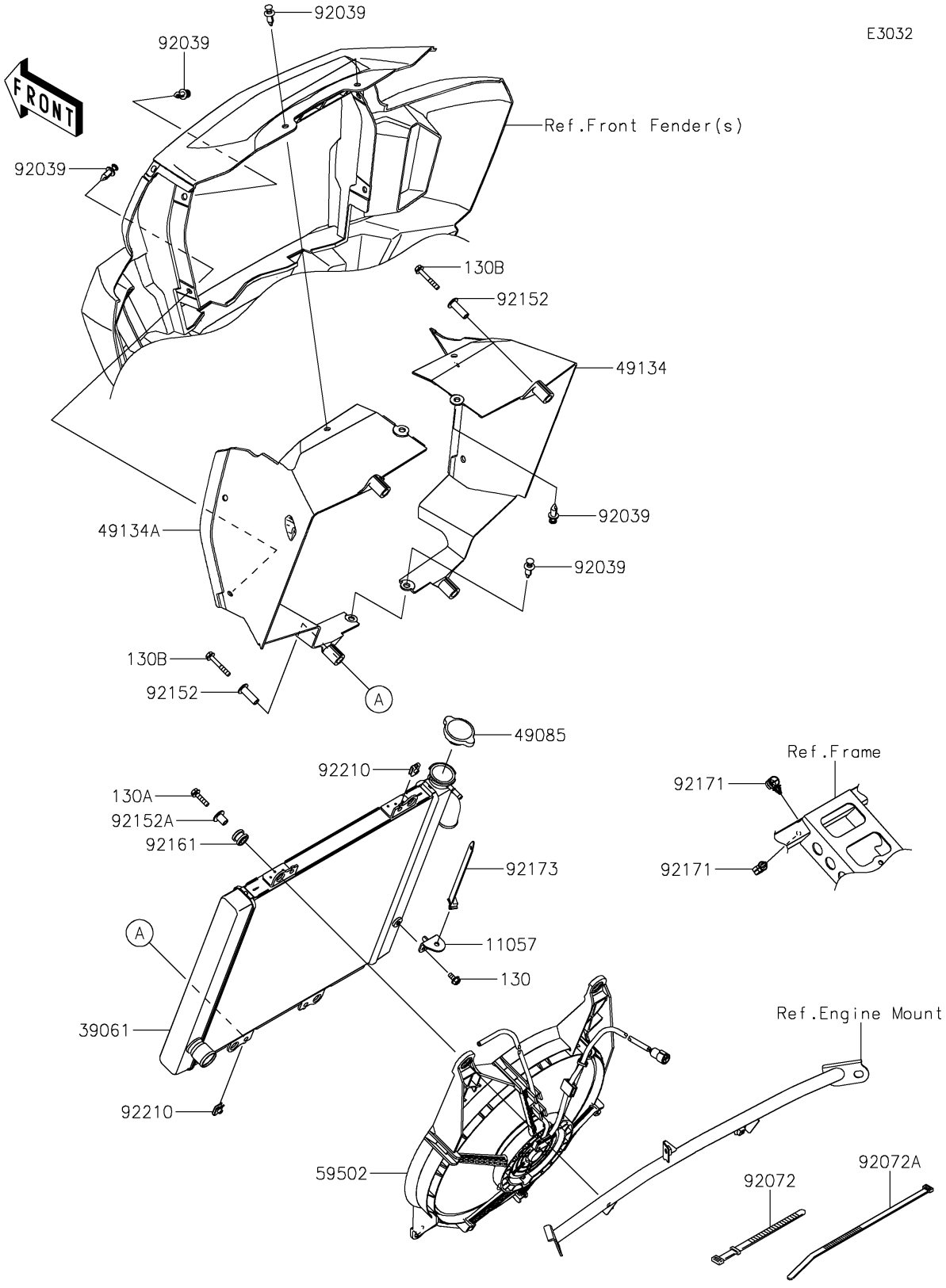

© 2026 Kawasaki Motors Corp., U.S.A.

2023 Teryx KRX® 1000 Trail Edition

Kawasaki
Let the Good Times Roll®

PARTS LIST

Radiator

ITEM NAME	PART NUMBER	QUANTITY
BRACKET (Ref # 11057)	11057-2564	1
RADIATOR-ASSY (Ref # 39061)	39061-0786	1
CAP-ASSY-PRESSURE (Ref # 49085)	49085-0005	1
SHROUD,RH (Ref # 49134)	49134-0001	1
SHROUD,LH (Ref # 49134A)	49134-0002	1
FAN-ASSY (Ref # 59502)	59502-0644	1
RIVET (Ref # 92039)	92039-0776	8
BAND,L=186 (Ref # 92072)	92072-056	3
BAND,L=292.1 (Ref # 92072A)	92072-3509	2
COLLAR (Ref # 92152)	92152-1215	4
COLLAR (Ref # 92152A)	92152-1512	4
DAMPER (Ref # 92161)	92161-1349	4
CLAMP,13MM DIA. (Ref # 92171)	92171-1415	2
CLAMP (Ref # 92173)	92173-1980	1
NUT (Ref # 92210)	92210-0754	4
BOLT-FLANGED,6X12 (Ref # 130)	130BA0612	1
BOLT-FLANGED,6X25 (Ref # 130A)	130BA0625	4
BOLT-FLANGED,6X40 (Ref # 130B)	130BA0640	4

© 2026 Kawasaki Motors Corp., U.S.A.