1991 Ninja® ZX™-6

PARTS DIAGRAM

Fender

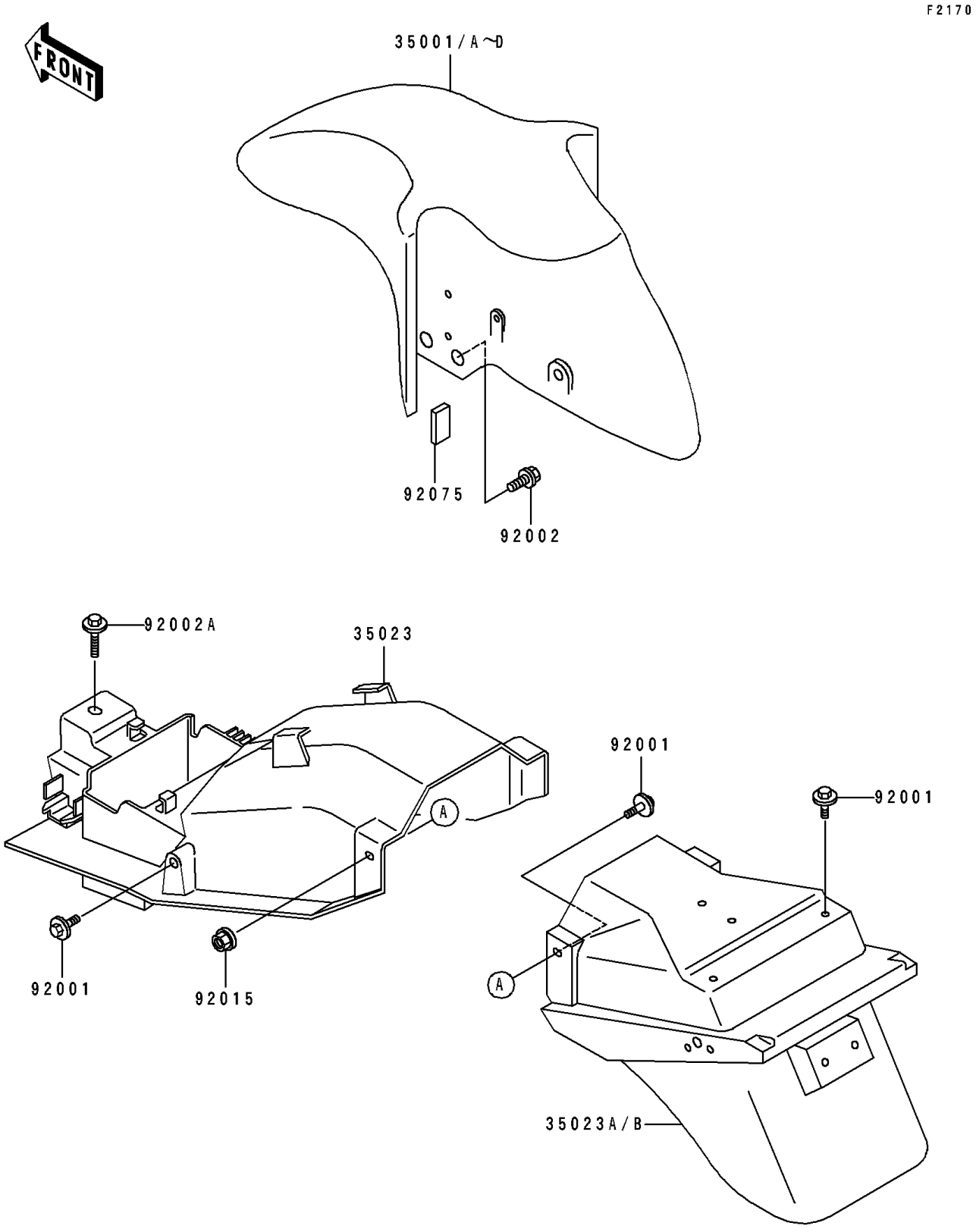

© 2026 Kawasaki Motors Corp., U.S.A.

1991 Ninja® ZX™-6

PARTS LIST

Fender

ITEM NAME	PART NUMBER	QUANTITY
FENDER-ASSY-FRONT,C.C.RED (Ref # 35001)	35001-1147-HR	1
FENDER-ASSY-FRONT,EBONY (Ref # 35001A)	35001-1147-H8	1
FENDER-ASSY-FRONT,C.C.RED (Ref # 35001B)	35001-1147-L1	1
FENDER-REAR,FR (Ref # 35023)	35023-1266	1
FENDER-REAR,RR (Ref # 35023A)	35023-1268	1
FENDER-REAR,RR (Ref # 35023B)	35023-1271	1
BOLT,6X16 (Ref # 92001)	92001-1950	6
BOLT,FLANGED,8X16 (Ref # 92002)	92002-1200	4
BOLT,6X25 (Ref # 92002A)	92002-1407	1
NUT,FLANGED,6MM,BLACK (Ref # 92015)	92015-1237	2
DAMPER (Ref # 92075)	92075-1902	2

© 2026 Kawasaki Motors Corp., U.S.A.