2023 Teryx KRX 1000 eS

PARTS DIAGRAM

Cables

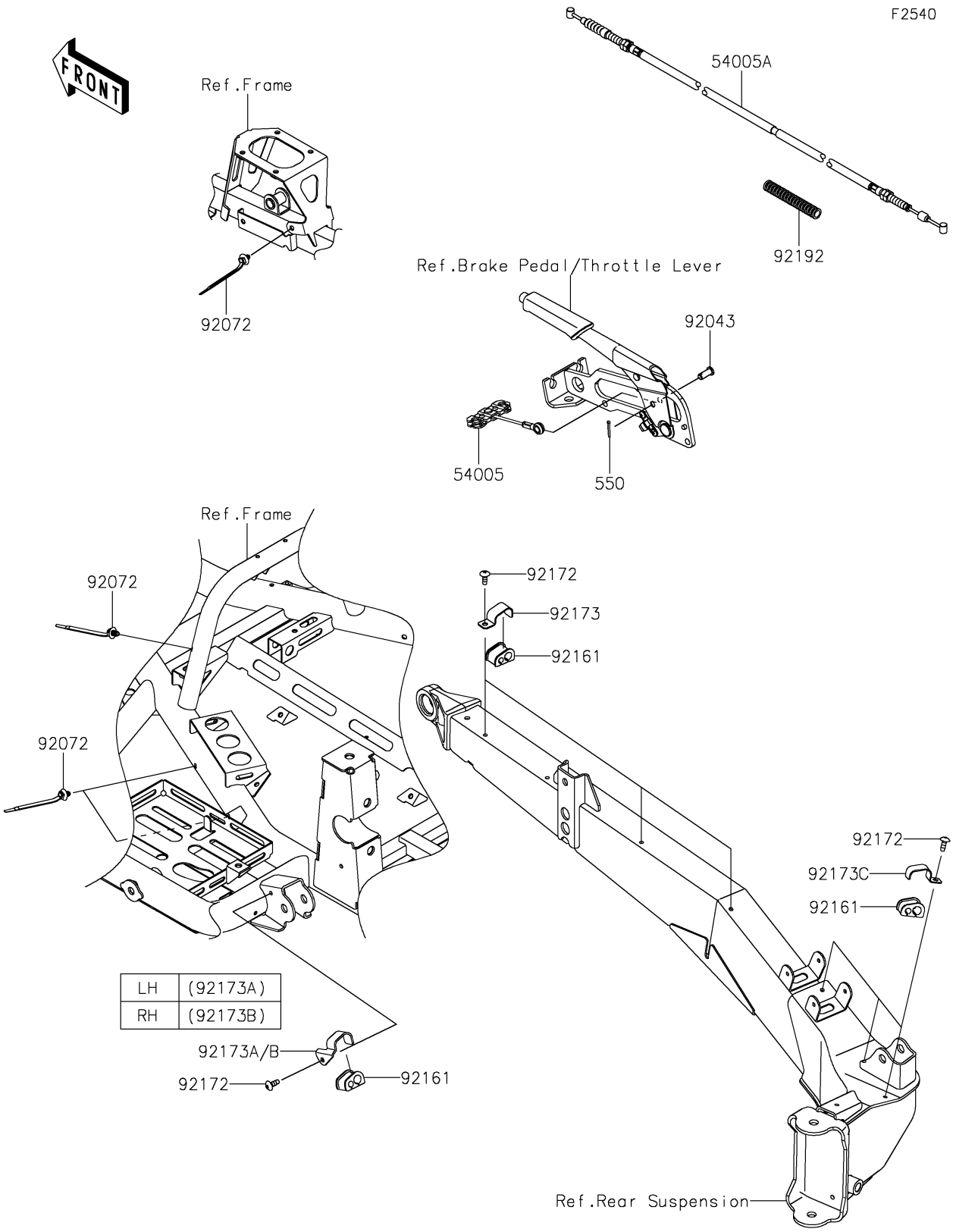

© 2026 Kawasaki Motors Corp., U.S.A.

2023 Teryx KRX 1000 eS

PARTS LIST

Cables

ITEM NAME	PART NUMBER	QUANTITY
CABLE-BRAKE,PARKING BRAKE (Ref # 54005)	54005-0312	1
CABLE-BRAKE,PARKING BRAKE (Ref # 54005A)	54005-0313	2
PIN (Ref # 92043)	92043-1039	1
BAND,OS170-FT7(BLACK) (Ref # 92072)	92072-1414	8
DAMPER (Ref # 92161)	92161-2174	14
SCREW,TAPPING,6X16 (Ref # 92172)	92172-0739	14
CLAMP (Ref # 92173)	92173-1991	6
CLAMP,LH (Ref # 92173A)	92173-1992	1
CLAMP,RH (Ref # 92173B)	92173-1993	1
CLAMP (Ref # 92173C)	92173-2097	6
TUBE,CORRUGATED,L=100 (Ref # 92192)	92192-3809	1
PIN-COTTER,2.5X18 (Ref # 550)	550AA2518	1

© 2026 Kawasaki Motors Corp., U.S.A.