2023 Teryx KRX 1000 eS

PARTS DIAGRAM

Meter(s)

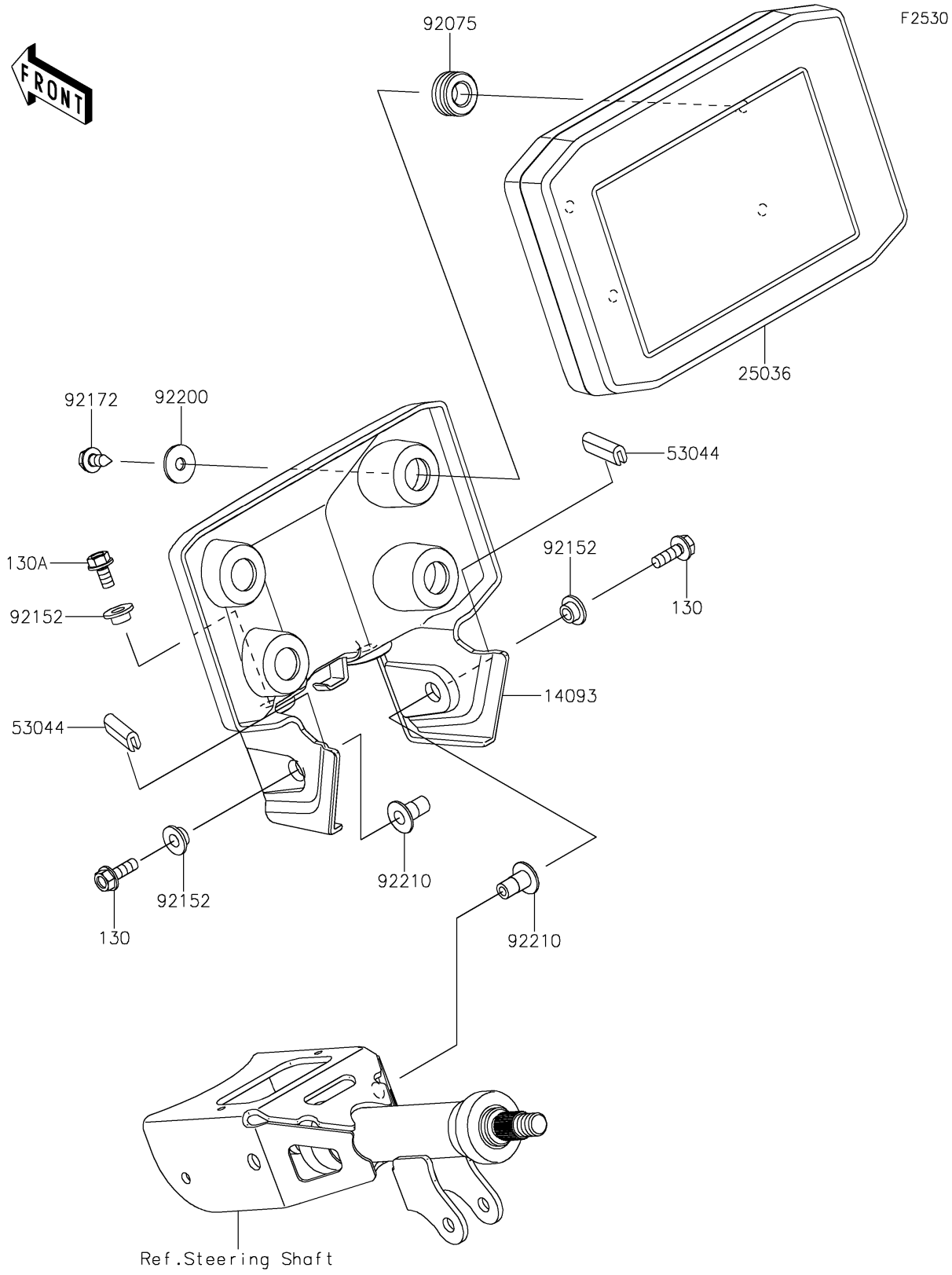

© 2026 Kawasaki Motors Corp., U.S.A.

2023 Teryx KRX 1000 eS

PARTS LIST

Meter(s)

ITEM NAME	PART NUMBER	QUANTITY
COVER,METER (Ref # 14093)	14093-1093	1
METER-ASSY,TFT DISPLAY (Ref # 25036)	25036-0012	1
TRIM,L=20 (Ref # 53044)	53044-1292	2
DAMPER (Ref # 92075)	92075-1898	4
COLLAR,6.5X10X6.2 (Ref # 92152)	92152-1511	4
SCREW,TAPPING,6X16 (Ref # 92172)	92172-1313	4
WASHER,6.5X20X1.6 (Ref # 92200)	92200-0283	4
NUT,METER BKT SIDE (Ref # 92210)	92210-1760	2
BOLT-FLANGED,6X18 (Ref # 130)	130BA0618	2
BOLT-FLANGED,6X12 (Ref # 130A)	130CA0612	2

© 2026 Kawasaki Motors Corp., U.S.A.