2023 Teryx KRX 1000 eS

PARTS DIAGRAM

Front Suspension

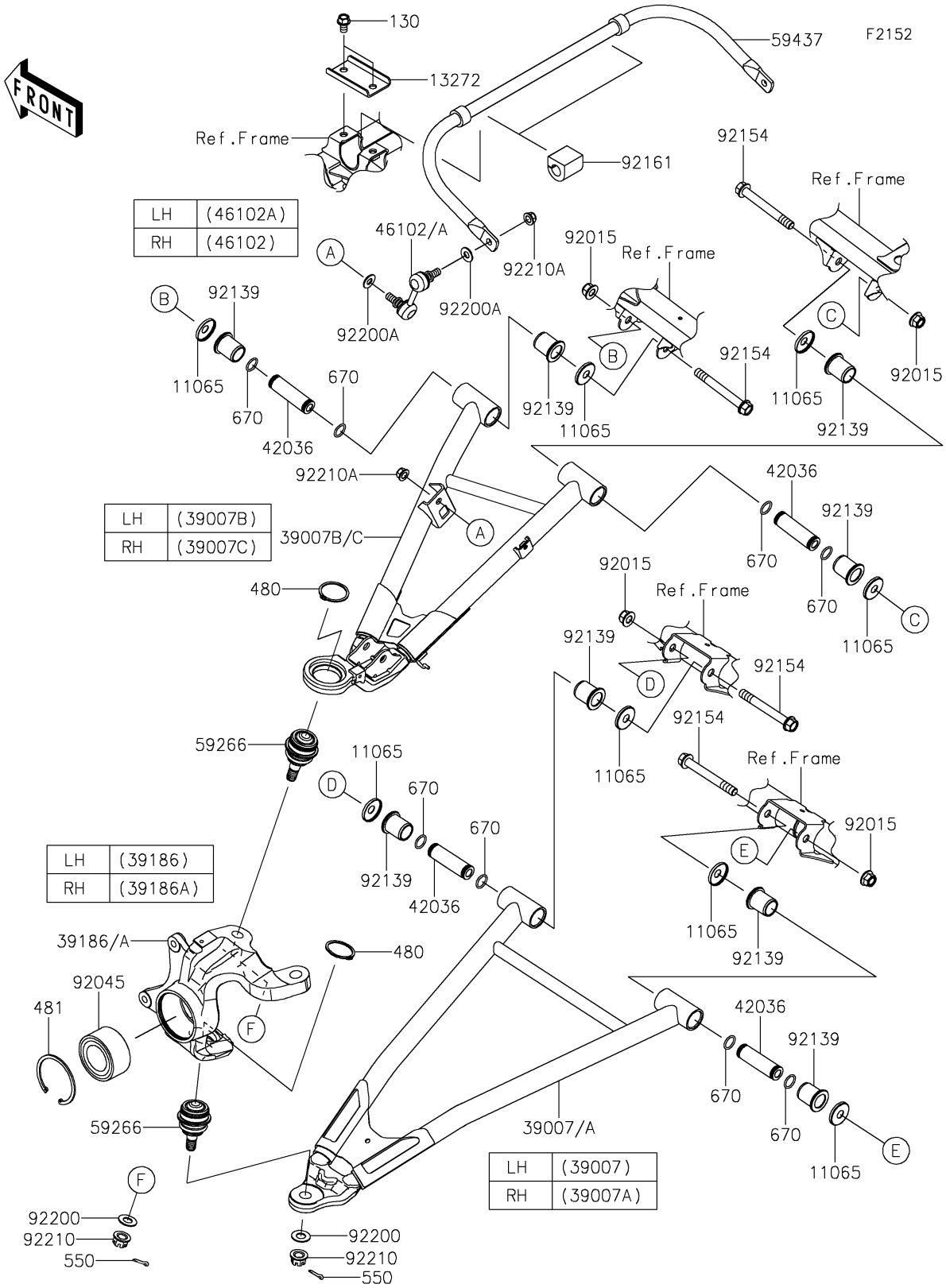

© 2026 Kawasaki Motors Corp., U.S.A.

2023 Teryx KRX 1000 eS

PARTS LIST

Front Suspension

ITEM NAME	PART NUMBER	QUANTITY

© 2026 Kawasaki Motors Corp., U.S.A.