2024 TERYX KRX® 1000 eS

PARTS DIAGRAM

Muffler(s)

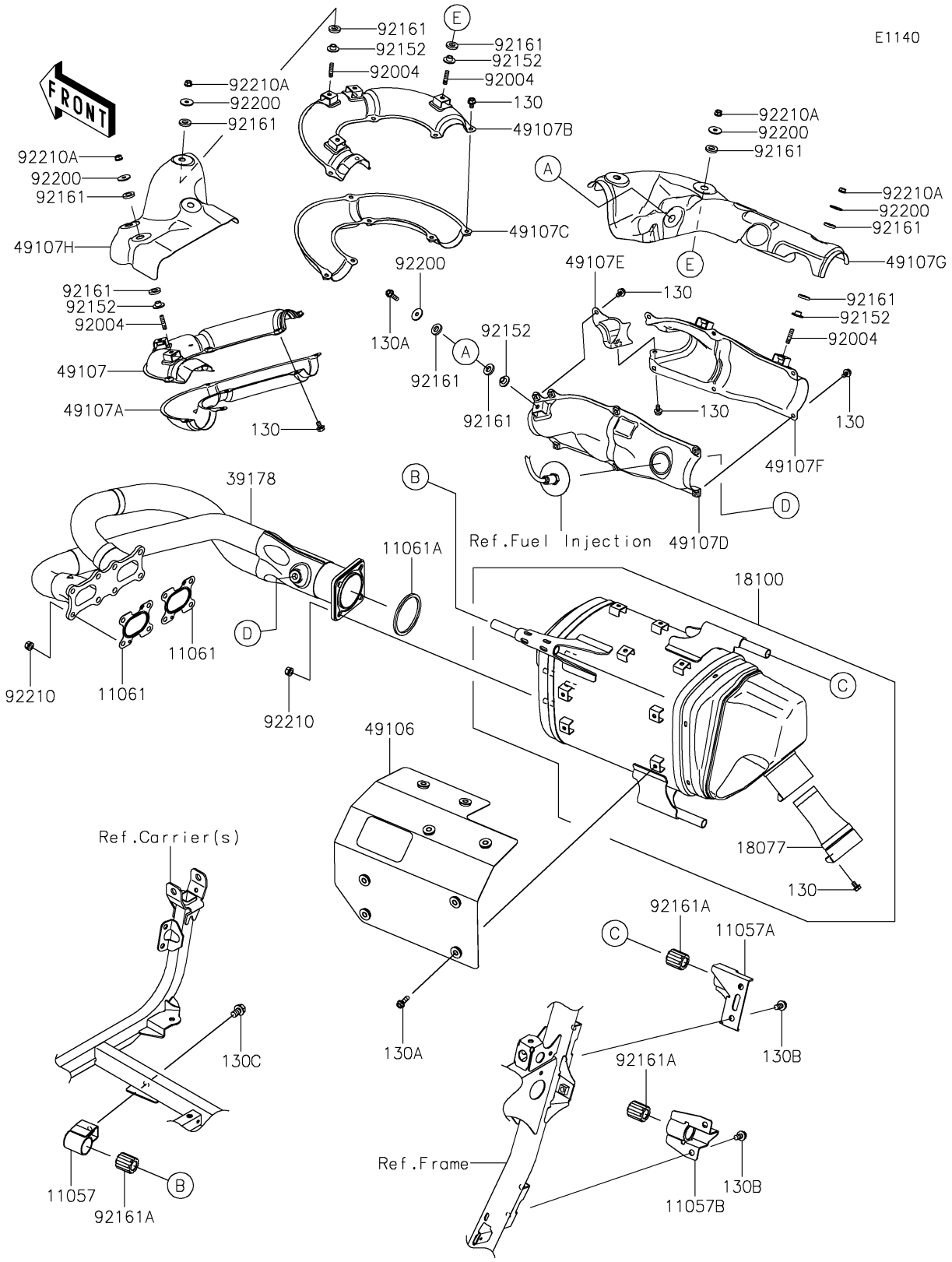

© 2026 Kawasaki Motors Corp., U.S.A.

2024 TERYX KRX® 1000 eS

PARTS LIST

Muffler(s)

ITEM NAME	PART NUMBER	QUANTITY

© 2026 Kawasaki Motors Corp., U.S.A.