2023 Teryx KRX®4 1000 eS Special Edition

Kawasaki
Let the Good Times Roll®

PARTS DIAGRAM

Frame Fittings(Rear)

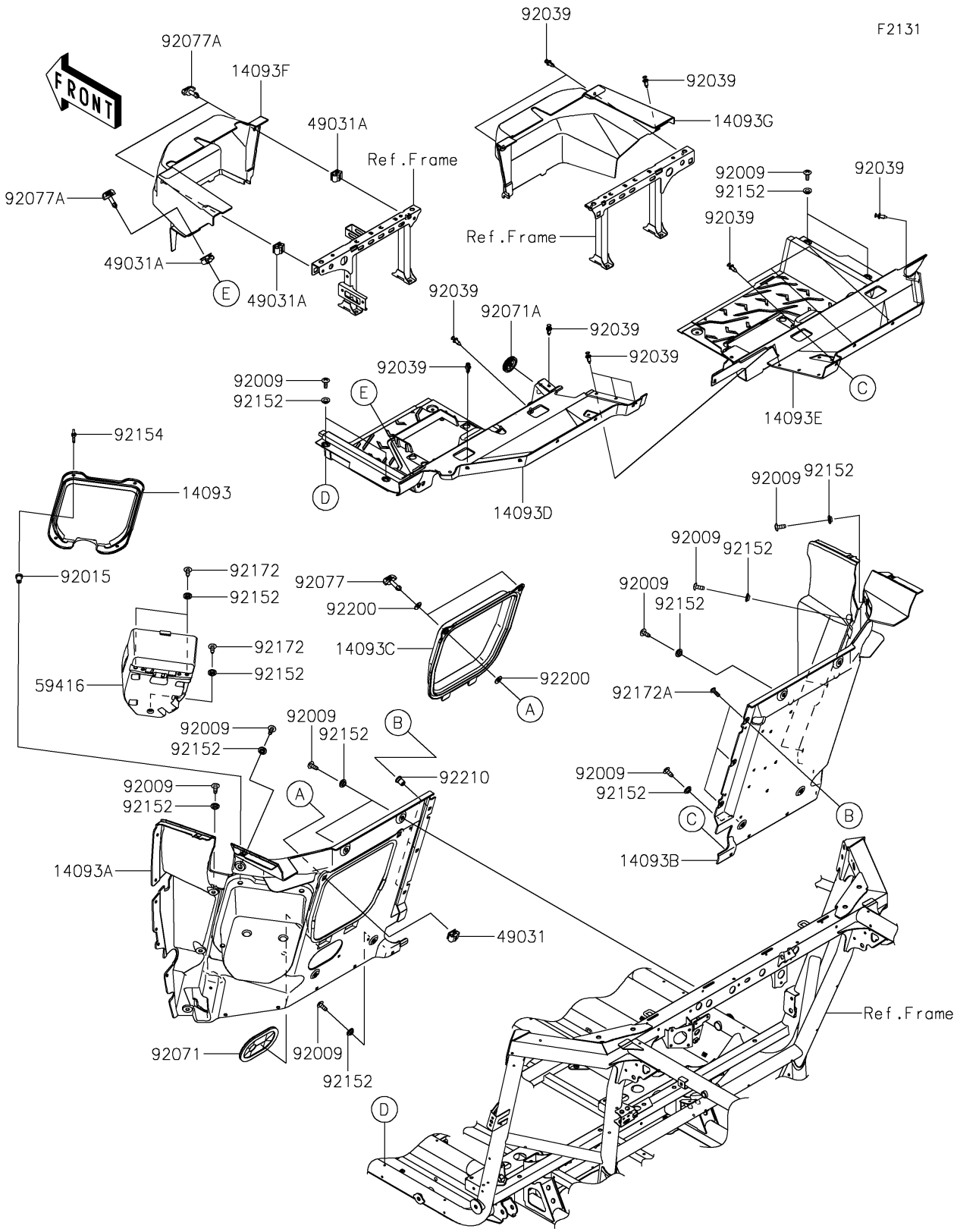

© 2026 Kawasaki Motors Corp., U.S.A.

2023 Teryx KRX®4 1000 eS Special Edition

Kawasaki
Let the Good Times Roll®

PARTS LIST

Frame Fittings(Rear)

ITEM NAME	PART NUMBER	QUANTITY
COVER,ELECTRIC-CASE (Ref # 14093)	14093-0821	1
COVER,SEAT-BACK-PANEL,LH (Ref # 14093A)	14093-0840	1
COVER,SEAT-BACK-PANEL,RH (Ref # 14093B)	14093-0841	1
COVER,A/C-BOX (Ref # 14093C)	14093-0843	1
COVER,RR,FLOOR,LH (Ref # 14093D)	14093-1231	1
COVER,RR,FLOOR,RH (Ref # 14093E)	14093-1232	1
COVER,BATTERY (Ref # 14093F)	14093-1239	1
COVER,SEAT FRAME (Ref # 14093G)	14093-1240	1
LATCH,A/C-BOX (Ref # 49031)	49031-0022	2
LATCH (Ref # 49031A)	49031-0030	3
CASE-ELECTRIC (Ref # 59416)	59416-0028	1
SCREW,TAPPING,6X16 (Ref # 92009)	92009-1166	20
NUT,RUBBER,6MM (Ref # 92015)	92015-1692	4
RIVET (Ref # 92039)	92039-0776	18
GROMMET (Ref # 92071)	92071-0789	1
GROMMET (Ref # 92071A)	92071-0791	1
KNOB (Ref # 92077)	92077-0030	2
KNOB (Ref # 92077A)	92077-0040	3
COLLAR,6.3X9.5X4.1 (Ref # 92152)	92152-1571	23
BOLT,WING,6X25 (Ref # 92154)	92154-4116	4
SCREW,6X16 (Ref # 92172)	92172-0284	3
SCREW,5MM (Ref # 92172A)	92172-0292	3
WASHER (Ref # 92200)	92200-0503	4
NUT,WELL,5MM (Ref # 92210)	92210-0370	3

© 2026 Kawasaki Motors Corp., U.S.A.