2022 TERYX KRX® 1000

PARTS DIAGRAM

Carrier(s)

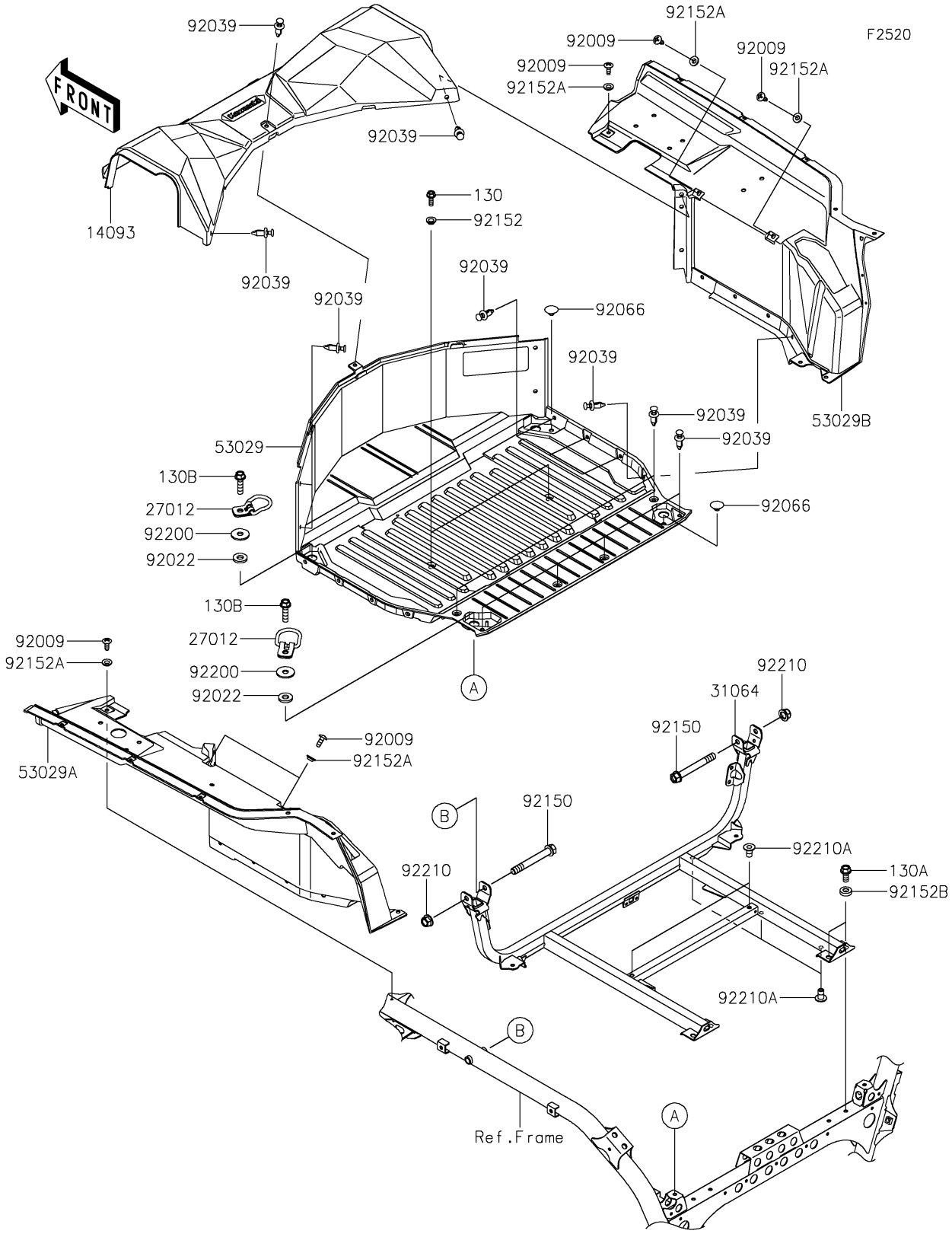

© 2026 Kawasaki Motors Corp., U.S.A.

2022 TERYX KRX® 1000

PARTS LIST

Carrier(s)

ITEM NAME	PART NUMBER	QUANTITY
COVER,MAINTENANCE (Ref # 14093)	14093-0799	1
HOOK (Ref # 27012)	27012-0863	4
PIPE-COMP,RR CARRIER FRAME (Ref # 31064)	31064-0716	1
CARRIER,BASE (Ref # 53029)	53029-0359	1
CARRIER,LH (Ref # 53029A)	53029-0360	1
CARRIER,RH (Ref # 53029B)	53029-0361	1
SCREW,TAPPING,6X16 (Ref # 92009)	92009-1166	6
WASHER,10X22X3.2 (Ref # 92022)	92022-1944	4
RIVET (Ref # 92039)	92039-0776	21
PLUG (Ref # 92066)	92066-1485	2
BOLT,10X80 (Ref # 92150)	92150-1893	2
COLLAR (Ref # 92152)	92152-0224	2
COLLAR,6.3X9.5X4.1 (Ref # 92152A)	92152-1571	6
COLLAR,8.2X18X5 (Ref # 92152B)	92152-1848	4
WASHER,9X28X2.3 (Ref # 92200)	92200-1951	4
NUT,LOCK,FLANGED,10MM (Ref # 92210)	92210-0276	2
NUT,LARGE FLANGE,6MM,L=16.5 (Ref # 92210A)	92210-1623	5
BOLT-FLANGED,6X18 (Ref # 130)	130CA0618	2
BOLT-FLANGED,8X18 (Ref # 130A)	130CA0818	4
BOLT-FLANGED,8X30 (Ref # 130B)	130CA0830	4

© 2026 Kawasaki Motors Corp., U.S.A.