2021 TERYX KRX® 1000 SPECIAL EDITION

Kawasaki
Let the Good Times Roll®

PARTS DIAGRAM

Front Hubs/Brakes

F2230

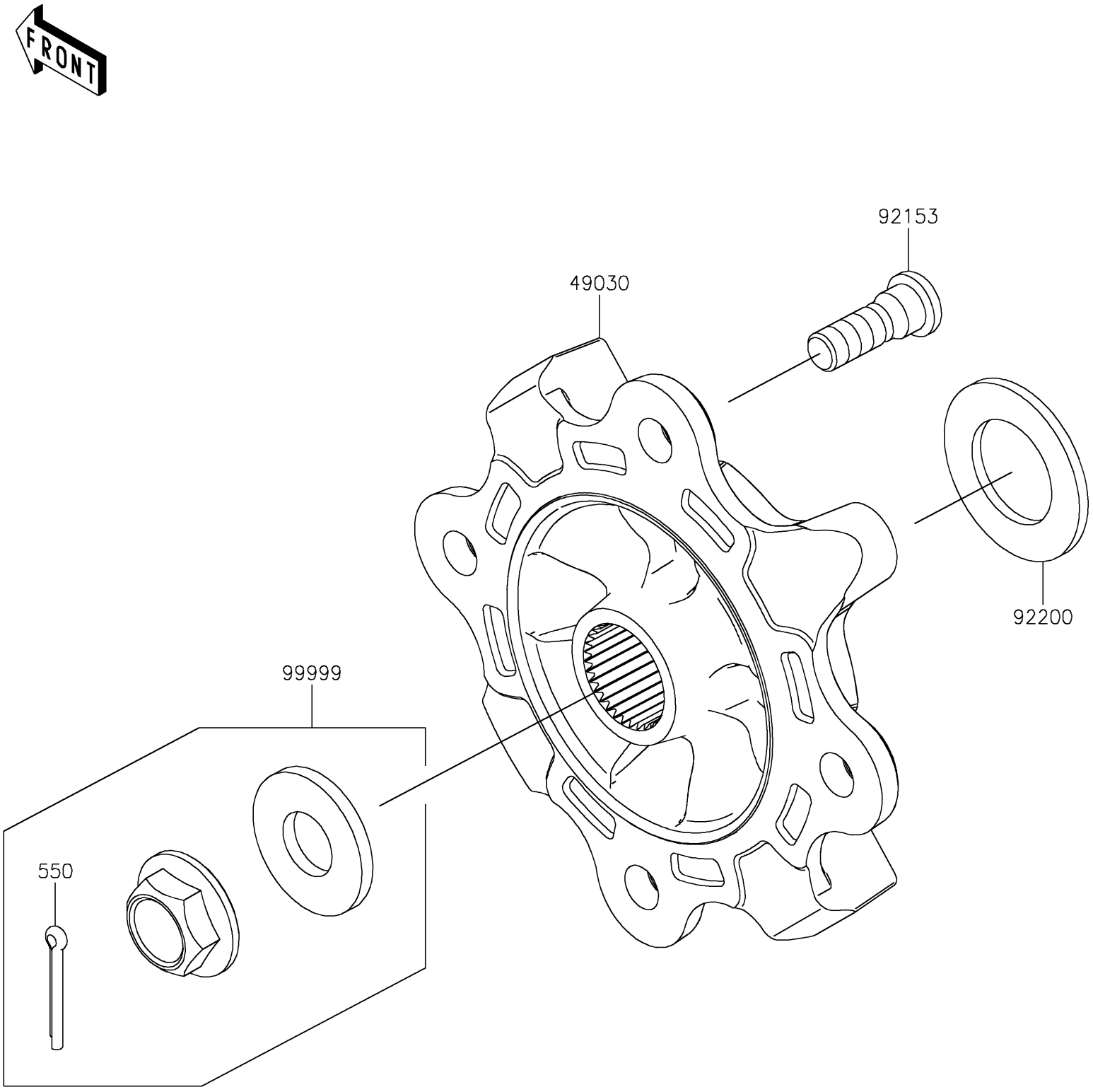

© 2026 Kawasaki Motors Corp., U.S.A.

2021 TERYX KRX® 1000 SPECIAL EDITION

Kawasaki
Let the Good Times Roll®

PARTS LIST

Front Hubs/Brakes

ITEM NAME	PART NUMBER	QUANTITY
HUB,FR (Ref # 49030)	49030-0566	2
BOLT,12MM (Ref # 92153)	92153-1915	8
WASHER,33X56X3.5 (Ref # 92200)	92200-2332	2
KIT,FR AXLE NUT (Ref # 99999)	99999-0725	1
PIN-COTTER,4.0X30 (Ref # 550)	550AA4030	1

© 2026 Kawasaki Motors Corp., U.S.A.