2021 TERYX KRX® 1000

PARTS DIAGRAM

Frame Fittings(Front)

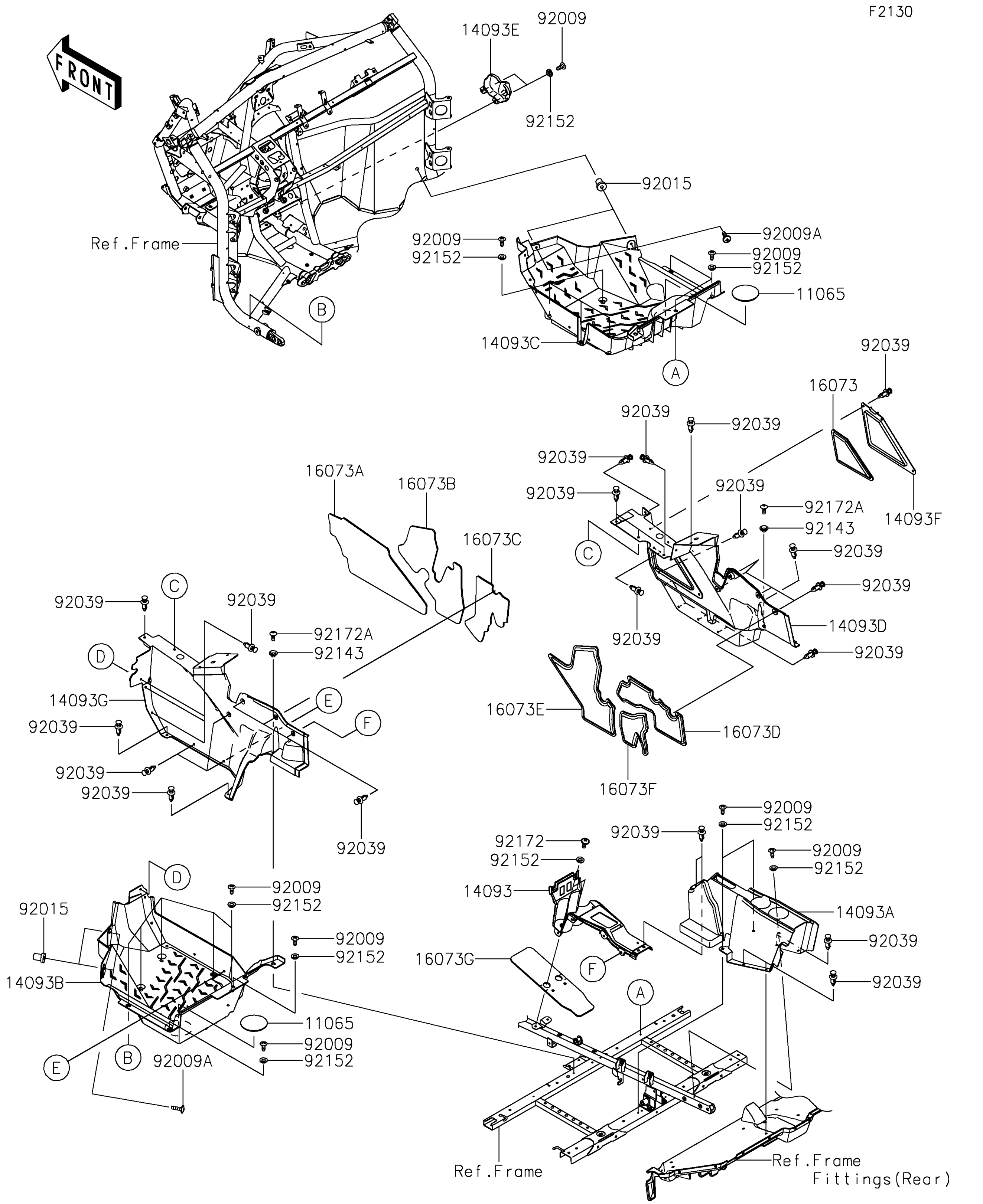

© 2026 Kawasaki Motors Corp., U.S.A.

2021 TERYX KRX® 1000

PARTS LIST

Frame Fittings(Front)

ITEM NAME	PART NUMBER	QUANTITY
CAP,F.BLACK (Ref # 11065)	11065-1053-6Z	2
COVER,CENTER CONSOLE,FR (Ref # 14093)	14093-0833	1
COVER,CENTER CONSOLE,RR (Ref # 14093A)	14093-0834	1
COVER,FLOOR,LH (Ref # 14093B)	14093-0835	1
COVER,FLOOR,RH (Ref # 14093C)	14093-0836	1
COVER,FLOOR,CNT,RH (Ref # 14093D)	14093-0838	1
COVER,FR GEAR,SIDE (Ref # 14093E)	14093-0839	1
COVER,MAINTENANCE (Ref # 14093F)	14093-0850	1
COVER,FLOOR,CNT,LH (Ref # 14093G)	14093-1102	1
INSULATOR (Ref # 16073)	16073-0891	1
INSULATOR (Ref # 16073A)	16073-0893	1
INSULATOR (Ref # 16073B)	16073-0894	1
INSULATOR (Ref # 16073C)	16073-0895	1
INSULATOR (Ref # 16073D)	16073-0897	1
INSULATOR (Ref # 16073E)	16073-0898	1
INSULATOR (Ref # 16073F)	16073-0899	1
INSULATOR (Ref # 16073G)	16073-0902	1
SCREW,TAPPING,6X16 (Ref # 92009)	92009-1166	19
SCREW,6X22,BLACK (Ref # 92009A)	92009-1256	4
NUT,RUBBER,6MM (Ref # 92015)	92015-1692	4
RIVET (Ref # 92039)	92039-0776	39
COLLAR (Ref # 92143)	92143-1057	2
COLLAR,6.3X9.5X4.1 (Ref # 92152)	92152-1571	21
SCREW,6X16 (Ref # 92172)	92172-0236	2
SCREW,TAPPING,6X16 (Ref # 92172A)	92172-0739	2

© 2026 Kawasaki Motors Corp., U.S.A.