2021 TERYX KRX® 1000 SPECIAL EDITION

Kawasaki
Let the Good Times Roll®

PARTS DIAGRAM

Drive Shaft-Rear

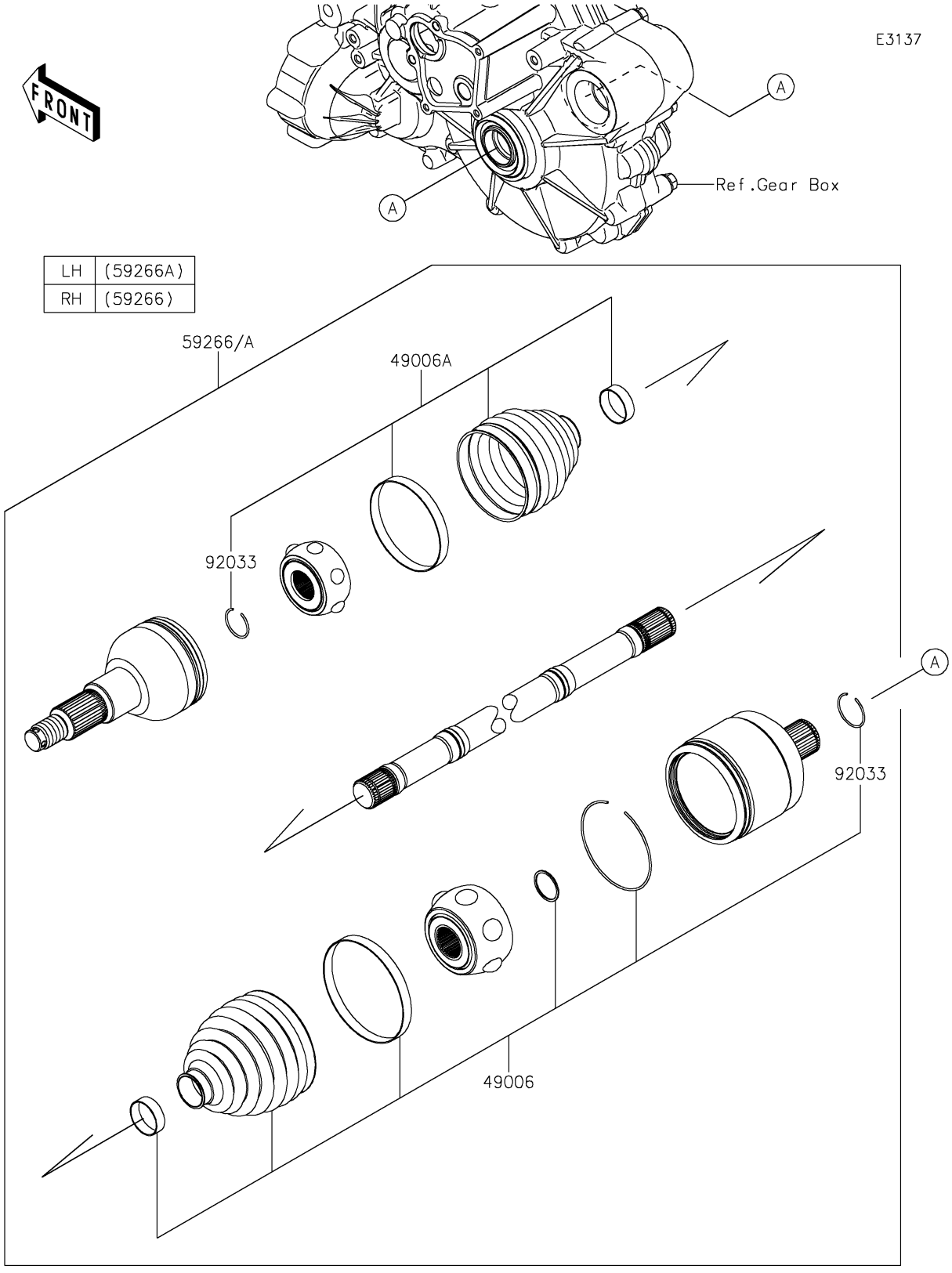

© 2026 Kawasaki Motors Corp., U.S.A.

2021 TERYX KRX® 1000 SPECIAL EDITION

Kawasaki
Let the Good Times Roll®

PARTS LIST

Drive Shaft-Rear

ITEM NAME	PART NUMBER	QUANTITY
BOOT,INSIDE (Ref # 49006)	49006-0613	2
BOOT,OUTSIDE (Ref # 49006A)	49006-0614	2
JOINT-BALL,RR,RH (Ref # 59266)	59266-0734	1
JOINT-BALL,RR,LH (Ref # 59266A)	59266-0742	1
RING-SNAP (Ref # 92033)	92033-0840	4

© 2026 Kawasaki Motors Corp., U.S.A.