2021 TERYX KRX® 1000 SPECIAL EDITION

Kawasaki
Let the Good Times Roll®

PARTS DIAGRAM

Generator

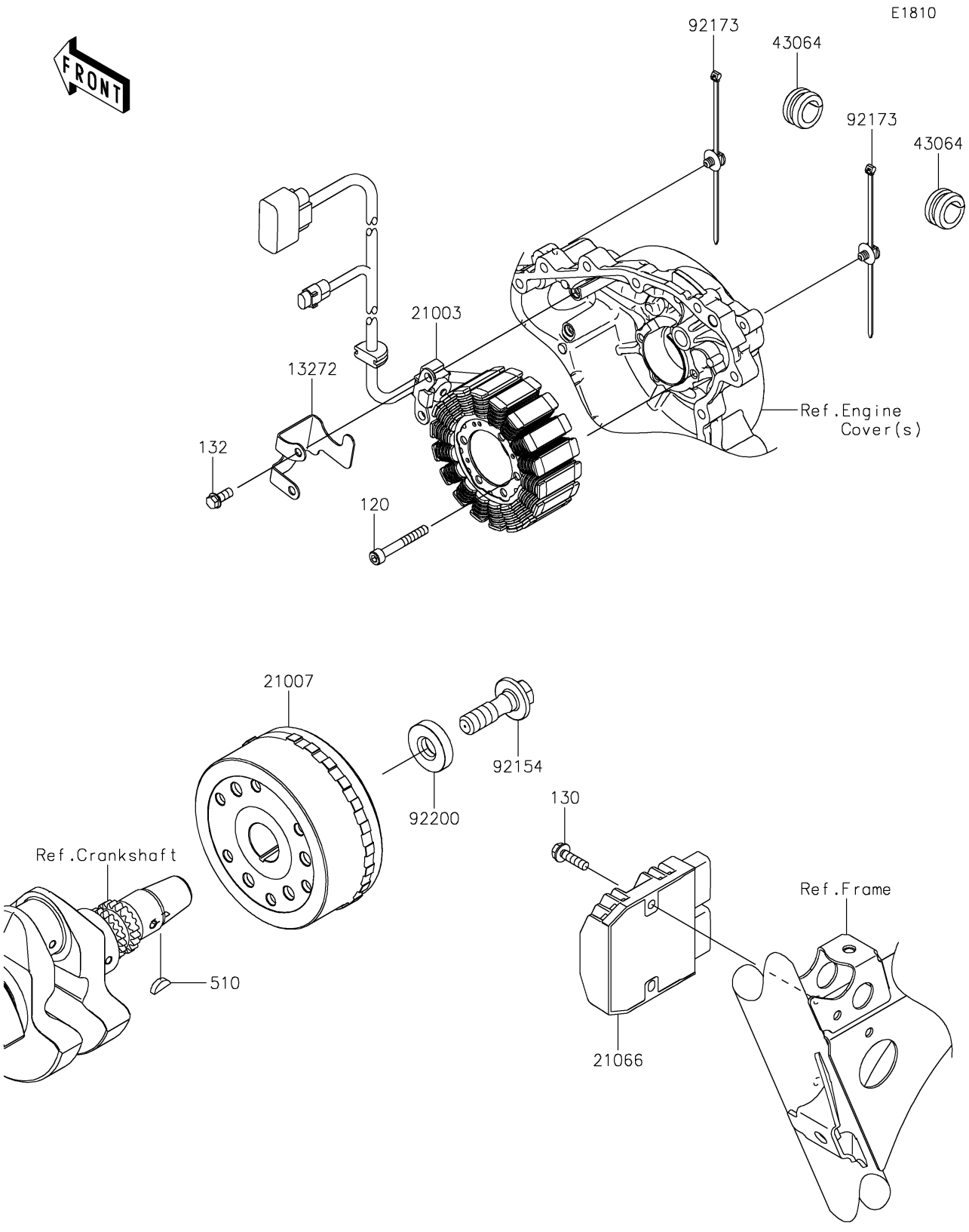

© 2026 Kawasaki Motors Corp., U.S.A.

2021 TERYX KRX® 1000 SPECIAL EDITION

Kawasaki
Let the Good Times Roll®

PARTS LIST

Generator

ITEM NAME	PART NUMBER	QUANTITY

© 2026 Kawasaki Motors Corp., U.S.A.