2021 TERYX KRX® 1000 SPECIAL EDITION

Kawasaki
Let the Good Times Roll®

PARTS DIAGRAM

Oil Pan

E1434

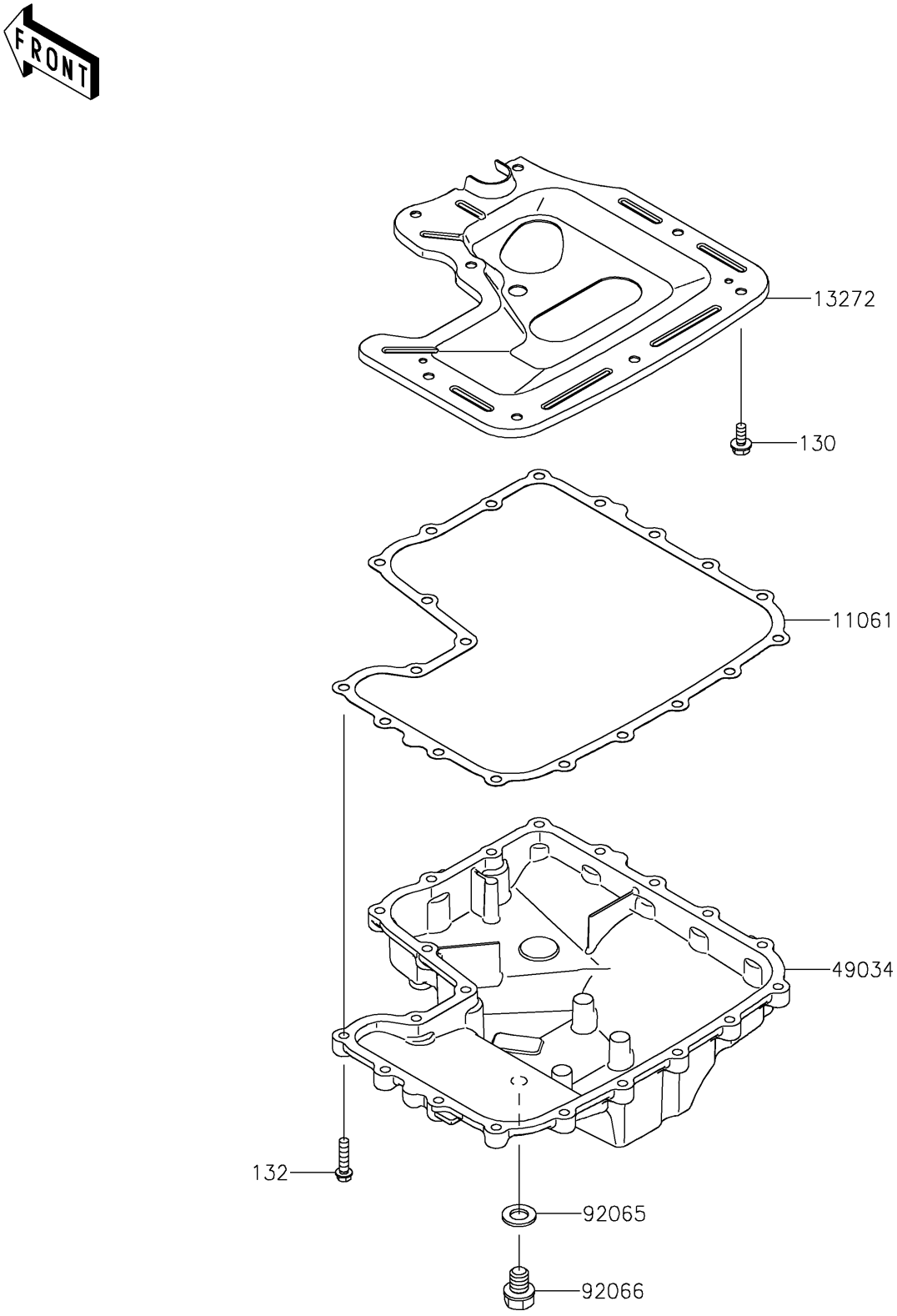

© 2026 Kawasaki Motors Corp., U.S.A.

2021 TERYX KRX® 1000 SPECIAL EDITION

Kawasaki
Let the Good Times Roll®

PARTS LIST

Oil Pan

ITEM NAME	PART NUMBER	QUANTITY
GASKET,OIL PAN (Ref # 11061)	11061-1306	1
PLATE,OIL PAN (Ref # 13272)	13272-2625	1
PAN-OIL (Ref # 49034)	49034-0573	1
GASKET,12X22X2 (Ref # 92065)	92065-097	1
PLUG,OIL DRAIN,12X15 (Ref # 92066)	92066-1174	1
BOLT-FLANGED,6X14 (Ref # 130)	130BA0614	8
BOLT-FLANGED-SMALL,6X25 (Ref # 132)	132BA0625	20

© 2026 Kawasaki Motors Corp., U.S.A.