2021 TERYX KRX® 1000 SPECIAL EDITION

Kawasaki
Let the Good Times Roll®

PARTS DIAGRAM

Engine Cover(s)

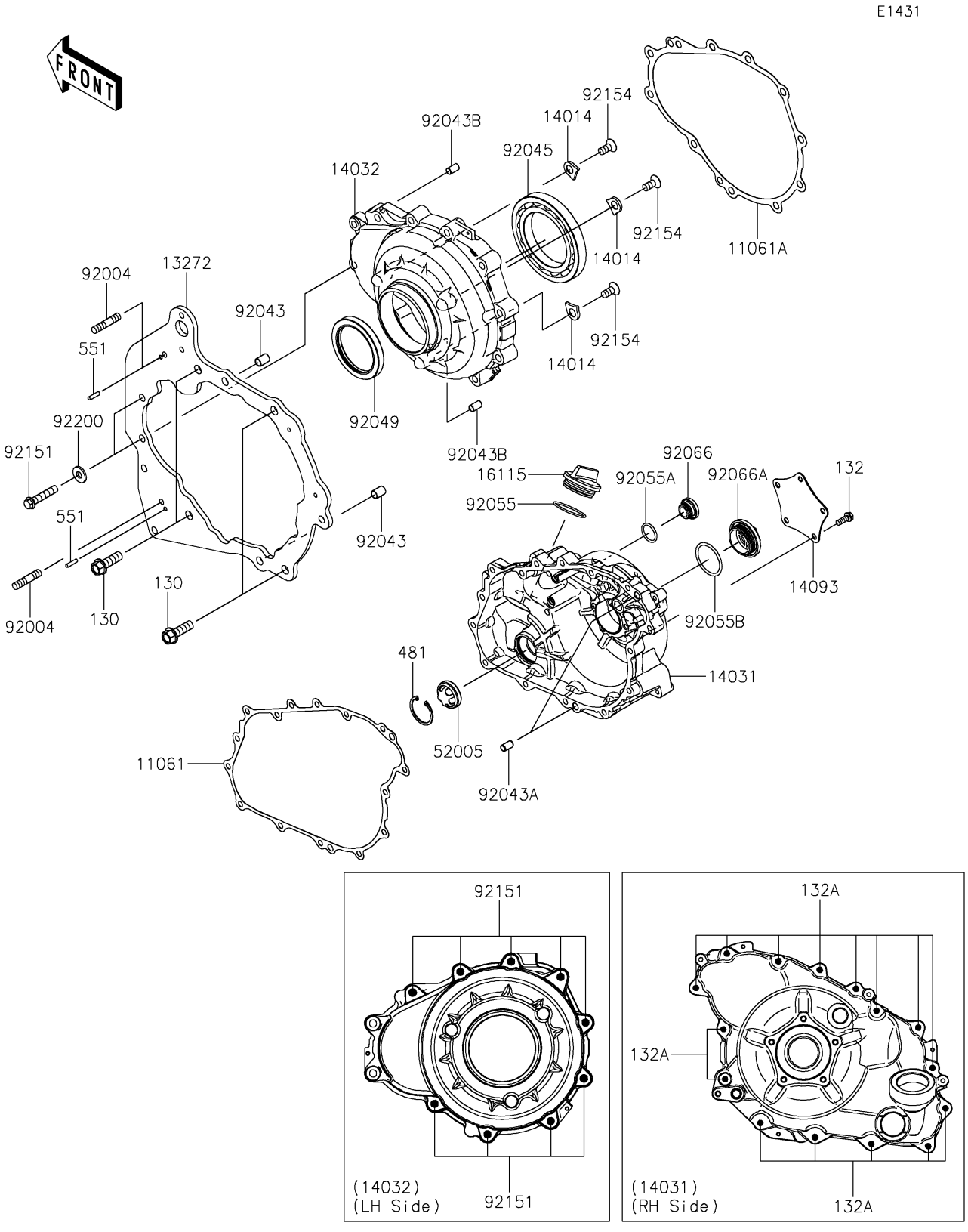

© 2026 Kawasaki Motors Corp., U.S.A.

2021 TERYX KRX® 1000 SPECIAL EDITION

Kawasaki
Let the Good Times Roll®

PARTS LIST

Engine Cover(s)

ITEM NAME	PART NUMBER	QUANTITY
GASKET,GENERATOR COVER (Ref # 11061)	11061-1304	1
GASKET,CLUTCH COVER (Ref # 11061A)	11061-1305	1
PLATE,CLUTCH COVER,BACK (Ref # 13272)	13272-2799	1
PLATE-POSITION (Ref # 14014)	14014-0556	3
COVER-GENERATOR (Ref # 14031)	14031-0639	1
COVER-CLUTCH (Ref # 14032)	14032-0646	1
COVER,GENERATOR,OUTER (Ref # 14093)	14093-0794	1
CAP-OIL FILLER (Ref # 16115)	16115-1064	1
GAUGE,OIL (Ref # 52005)	52005-0766	1
STUD,8X30 (Ref # 92004)	92004-0790	2
PIN,DOWEL,10X14 (Ref # 92043)	92043-1037	2
PIN,6.2X8X14 (Ref # 92043A)	92043-1263	2
PIN,8X14 (Ref # 92043B)	92043-1567	2
BEARING-BALL,16014CS45 (Ref # 92045)	92045-0709	1
SEAL-OIL,HTC 59X77X9 (Ref # 92049)	92049-0820	1
RING-O,37.2X1.9 (Ref # 92055)	92055-0959	1
RING-O,20X2 (Ref # 92055A)	92055-1146	1
RING-O,35.8MM (Ref # 92055B)	92055-1281	1
PLUG,COVER (Ref # 92066)	92066-0011	1
PLUG,36X7.5 (Ref # 92066A)	92066-0744	1
BOLT,8X40 (Ref # 92151)	92151-1621	11
BOLT,FLAT,8X13.6 (Ref # 92154)	92154-0978	3
WASHER,8.5X18X2.3 (Ref # 92200)	92200-1213	2
BOLT-FLANGED,10X30 (Ref # 130)	130BA1030	4
BOLT-FLANGED-SMALL,6X16 (Ref # 132)	132BA0616	5
BOLT-FLANGED-SMALL,6X30 (Ref # 132A)	132BA0630	15
CIRCLIP (Ref # 481)	481J3400	1
PIN-DOWEL,4X16 (Ref # 551)	551A0416	2

© 2026 Kawasaki Motors Corp., U.S.A.