2021 TERYX KRX® 1000 SPECIAL EDITION

Kawasaki
Let the Good Times Roll®

PARTS DIAGRAM

Gear Change Drum/Shift Fork(s)

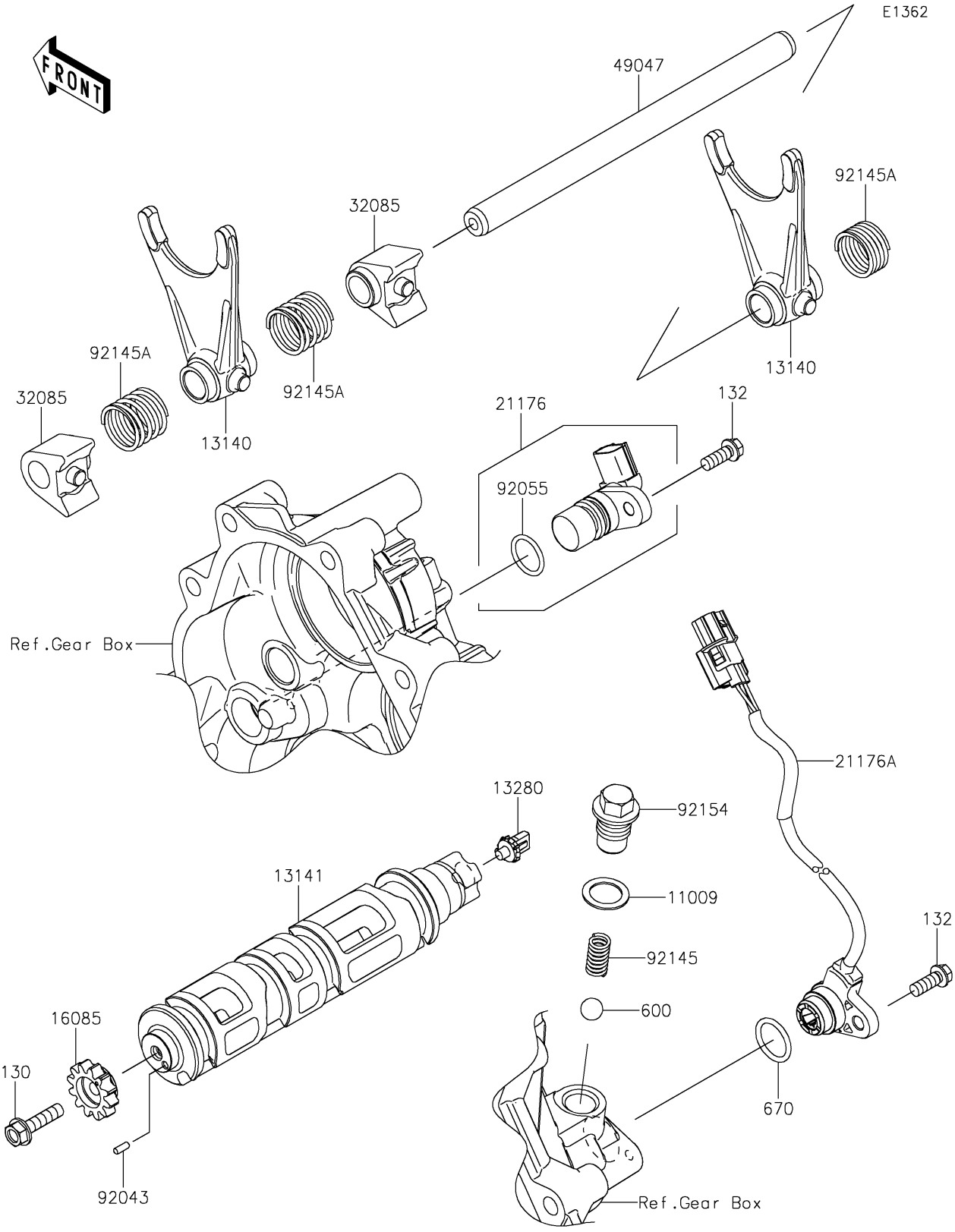

© 2026 Kawasaki Motors Corp., U.S.A.

2021 TERYX KRX® 1000 SPECIAL EDITION

Kawasaki
Let the Good Times Roll®

PARTS LIST

Gear Change Drum/Shift Fork(s)

ITEM NAME	PART NUMBER	QUANTITY
GASKET,15.5X22X1 (Ref # 11009)	11009-1008	1
FORK-SHIFT (Ref # 13140)	13140-0673	2
DRUM-CHANGE (Ref # 13141)	13141-0601	1
HOLDER (Ref # 13280)	13280-0932	1
GEAR,12T (Ref # 16085)	16085-0681	1
SENSOR,SPEED (Ref # 21176)	21176-0891	1
SENSOR,GEAR POSITION (Ref # 21176A)	21176-0910	1
STOPPER (Ref # 32085)	32085-0844	2
ROD-SHIFT (Ref # 49047)	49047-0641	1
PIN,3X8 (Ref # 92043)	92043-1716	1
RING-O (Ref # 92055)	92055-1639	1
SPRING (Ref # 92145)	92145-1590	1
SPRING (Ref # 92145A)	92145-1836	3
BOLT,CHANGE POSITION (Ref # 92154)	92154-1366	1
BOLT-FLANGED,6X25 (Ref # 130)	130CA0625	1
BOLT-FLANGED-SMALL,6X16 (Ref # 132)	132BA0616	2
BALL-STEEL,13/32 (Ref # 600)	600A1300	1
O RING,18MM (Ref # 670)	670D2018	1

© 2026 Kawasaki Motors Corp., U.S.A.