2021 TERYX KRX® 1000 SPECIAL EDITION

Kawasaki
Let the Good Times Roll®

PARTS DIAGRAM

Clutch

E1350

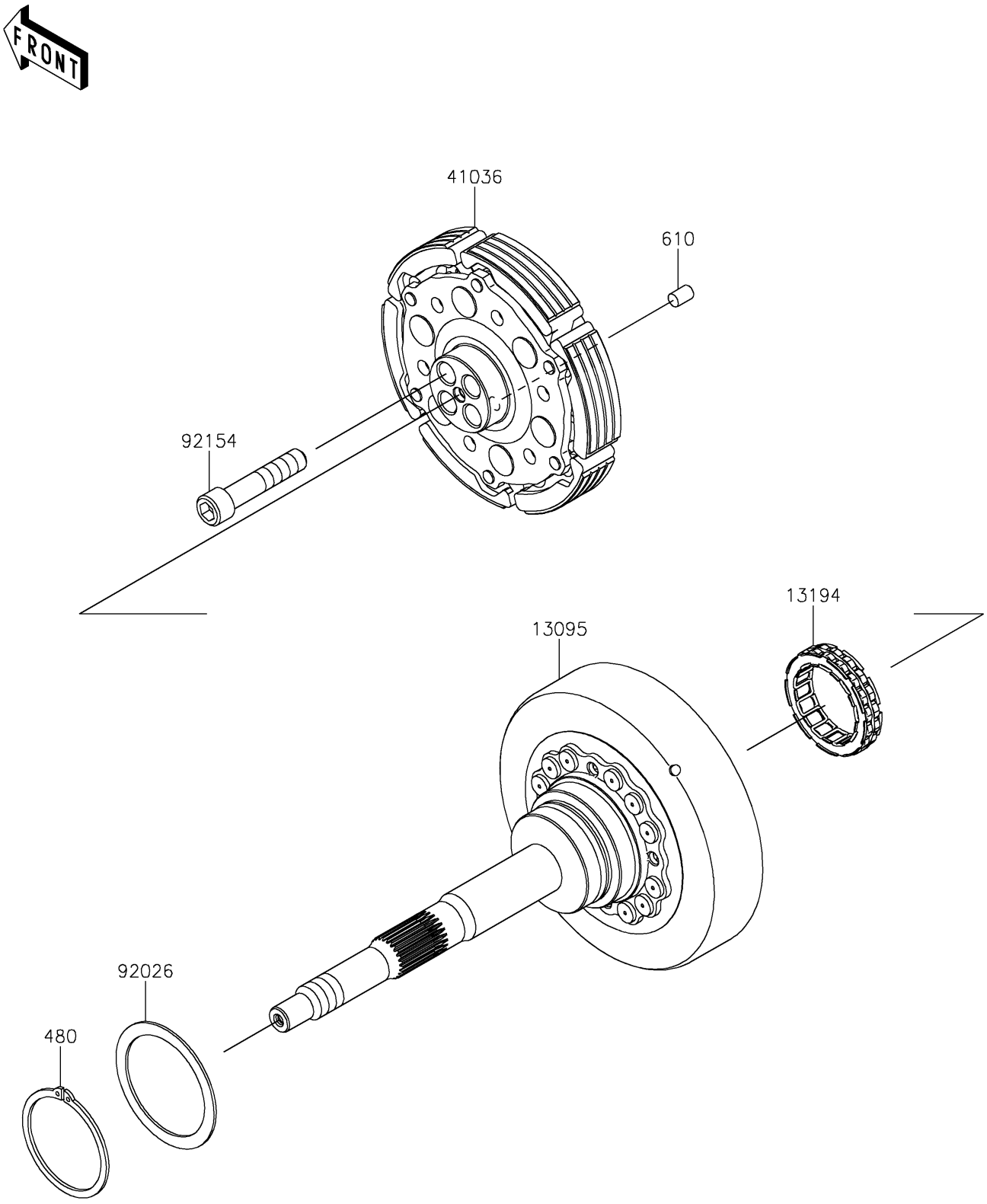

© 2026 Kawasaki Motors Corp., U.S.A.

2021 TERYX KRX® 1000 SPECIAL EDITION

Kawasaki
Let the Good Times Roll®

PARTS LIST

Clutch

ITEM NAME	PART NUMBER	QUANTITY
HOUSING-COMP-CLUTCH (Ref # 13095)	13095-0611	1
CLUTCH-ONEWAY (Ref # 13194)	13194-0022	1
HUB-ASSY (Ref # 41036)	41036-0872	1
SPACER (Ref # 92026)	92026-0710	1
BOLT,12X60 (Ref # 92154)	92154-3926	4
CIRCLIP-TYPE-C,60MM (Ref # 480)	480J6000	1
ROLLER,8X12 (Ref # 610)	610A0812	1

© 2026 Kawasaki Motors Corp., U.S.A.