2020 TERYX KRX® 1000

PARTS DIAGRAM

Fenders

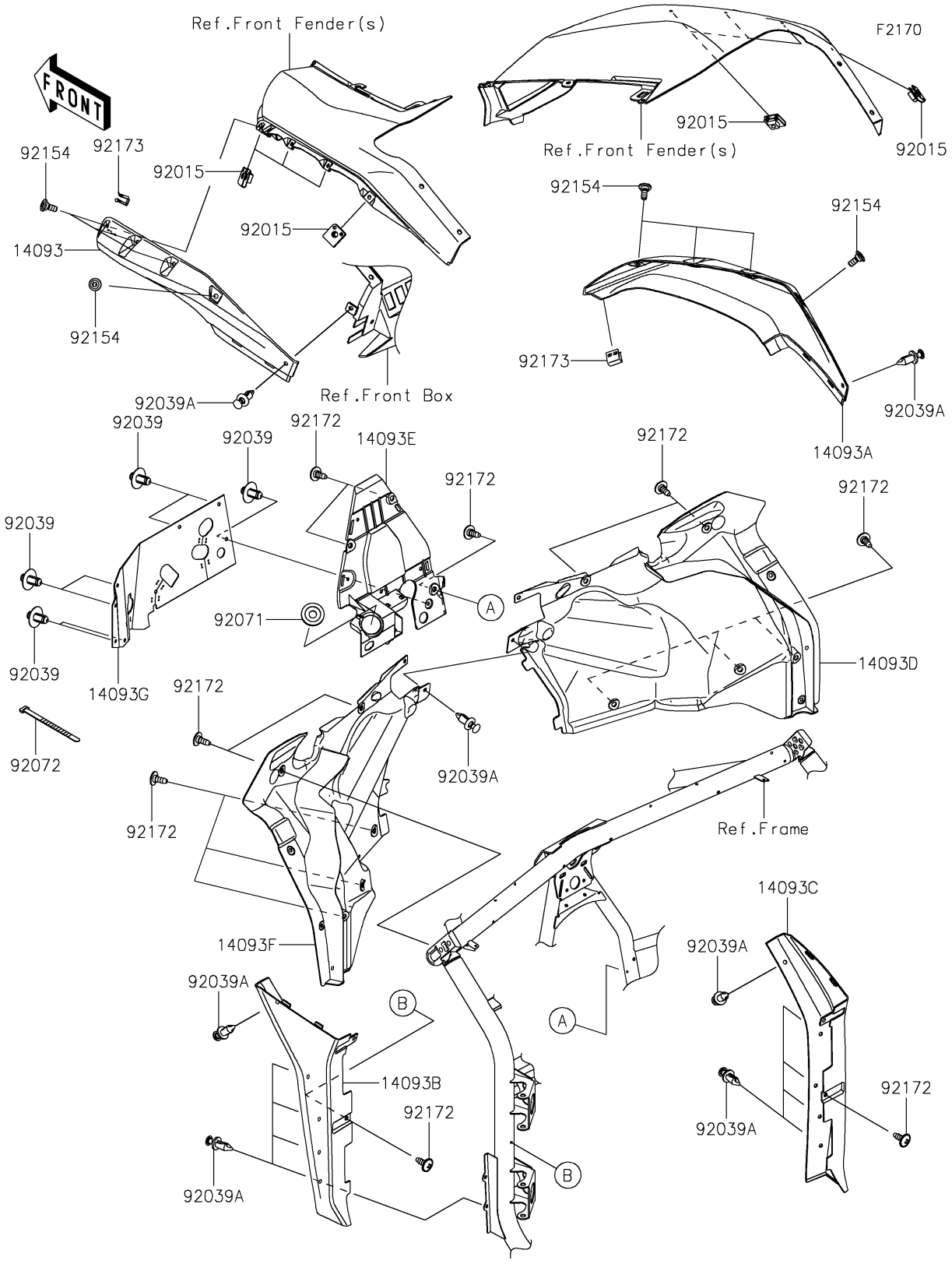

© 2026 Kawasaki Motors Corp., U.S.A.

2020 TERYX KRX® 1000

PARTS LIST

Fenders

ITEM NAME	PART NUMBER	QUANTITY
COVER,FLAP,UPP,LH (Ref # 14093)	14093-0806	1
COVER,FLAP,UPP,RH (Ref # 14093A)	14093-0807	1
COVER,FLAP,LWR,LH (Ref # 14093B)	14093-0808	1
COVER,FLAP,LWR,RH (Ref # 14093C)	14093-0809	1
COVER,FLOOR UPP,RH (Ref # 14093D)	14093-0822	1
COVER,FLOOR UPP,CNT (Ref # 14093E)	14093-0823	1
COVER,FLOOR UPP,LH (Ref # 14093F)	14093-0824	1
COVER,RUBBER (Ref # 14093G)	14093-0844	1
NUT,CLAMP,6MM (Ref # 92015)	92015-1678	8
RIVET (Ref # 92039)	92039-0086	7
RIVET (Ref # 92039A)	92039-0776	13
GROMMET (Ref # 92071)	92071-0790	1
BAND,L=123 (Ref # 92072)	92072-030	5
BOLT (Ref # 92154)	92154-2474	8
SCREW,6X16 (Ref # 92172)	92172-0711	15
CLAMP (Ref # 92173)	92173-2249	2

© 2026 Kawasaki Motors Corp., U.S.A.