# 2009 Brute Force® 750 4x4i

## PARTS DIAGRAM

### Control

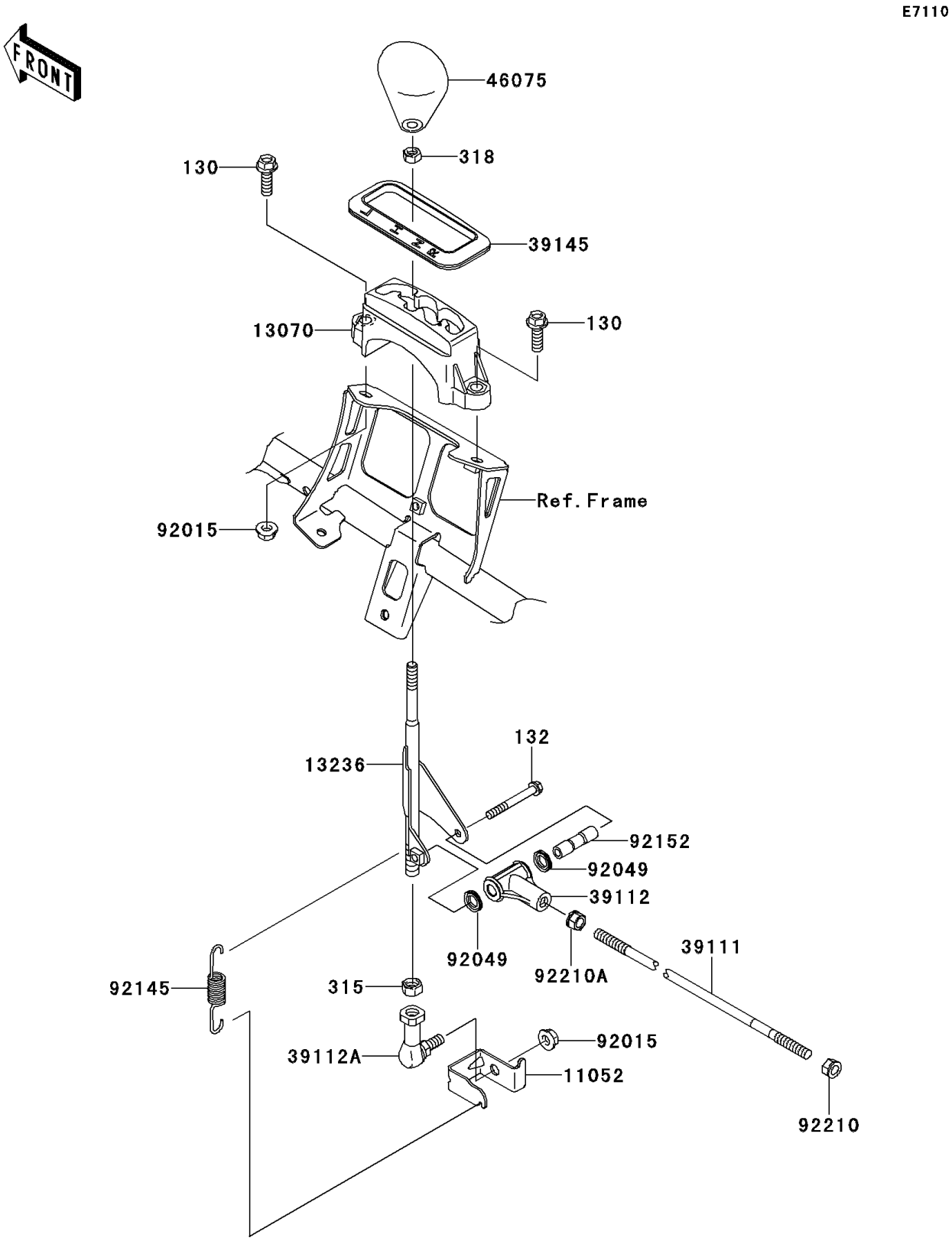


© 2026 Kawasaki Motors Corp., U.S.A.

# 2009 Brute Force® 750 4x4i

## PARTS LIST

### Control

| ITEM NAME | PART NUMBER | QUANTITY |
|---|---|---|
| BOLT-FLANGED,8X25 (Ref # 130) | 130CD0825 | 2 |
| BOLT-FLANGED-SMALL,6X50 (Ref # 132) | 132BB0650 | 1 |
| NUT-HEX-FINE,10MM (Ref # 315) | 315AA1000 | 1 |
| NUT-HEX-SMALL,8MM (Ref # 318) | 318BA0800 | 1 |
| BRACKET,CONTROL (Ref # 11052) | 11052-1476 | 1 |
| GUIDE,CONTROL SHAFT (Ref # 13070) | 13070-1396 | 1 |
| LEVER-COMP,SHIFT (Ref # 13236) | 13236-0034 | 1 |
| ROD-TIE,SHIFT (Ref # 39111) | 39111-1174 | 1 |
| RODEND-TIE (Ref # 39112) | 39112-1079 | 1 |
| RODEND-TIE,CONTROL PIVOT (Ref # 39112A) | 39112-1084 | 1 |
| TRIM-SEAL,CONTROL GUIDE (Ref # 39145) | 39145-1121 | 1 |
| GRIP,SHIFT (Ref # 46075) | 46075-0046 | 1 |
| NUT,8MM (Ref # 92015) | 92015-1432 | 2 |
| SEAL-OIL (Ref # 92049) | 92049-1458 | 2 |
| SPRING (Ref # 92145) | 92145-0130 | 1 |
| COLLAR,RODEND-TIE (Ref # 92152) | 92152-1222 | 1 |
| NUT,8MM (Ref # 92210) | 92210-1242 | 1 |
| NUT,LH,THREAD 8MM (Ref # 92210A) | 92210-1284 | 1 |

© 2026 Kawasaki Motors Corp., U.S.A.