1994 Ninja® 600R

PARTS DIAGRAM

Cylinder/Piston(s)

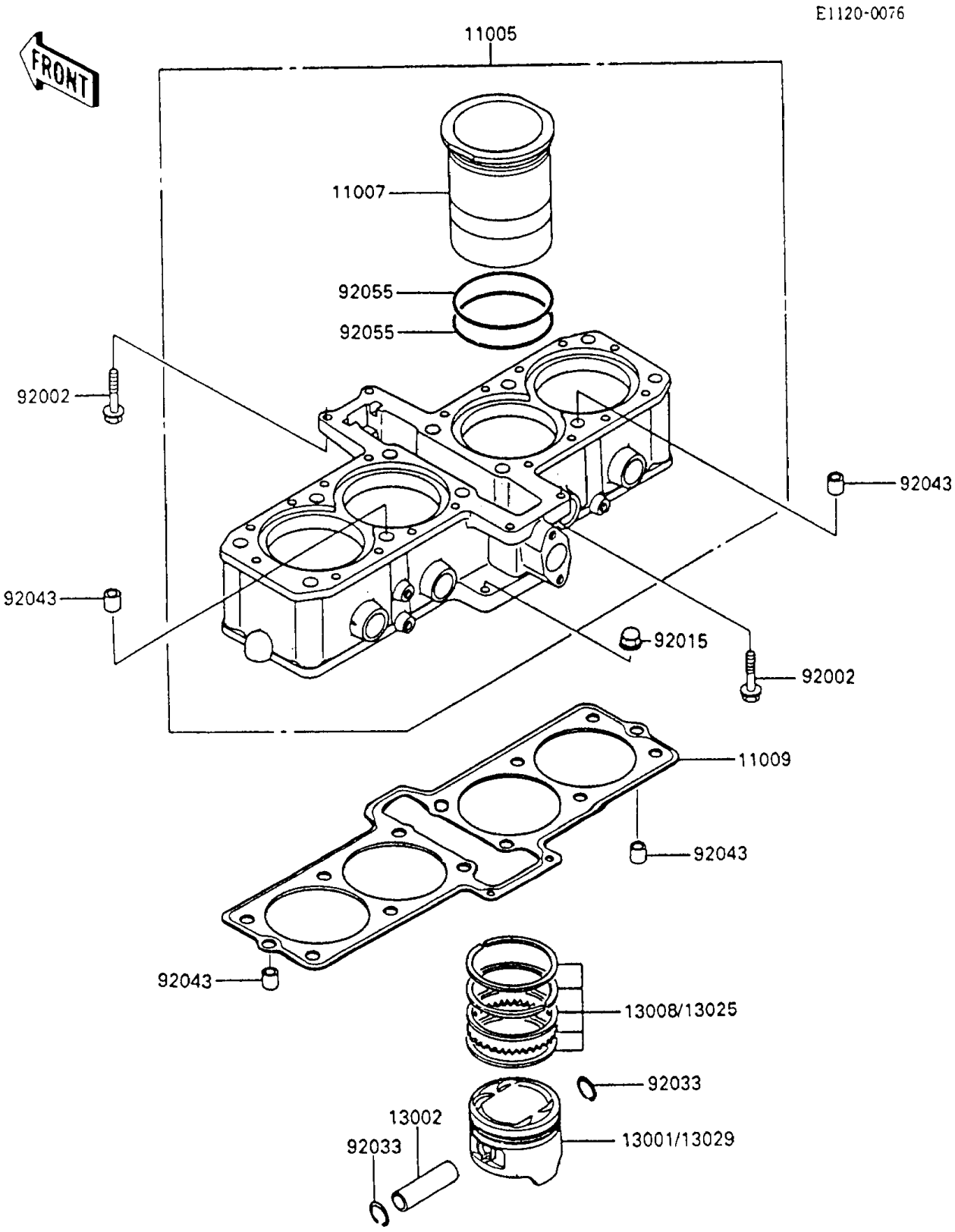

© 2026 Kawasaki Motors Corp., U.S.A.

1994 Ninja® 600R

PARTS LIST

Cylinder/Piston(s)

ITEM NAME	PART NUMBER	QUANTITY
CYLINDER-ENGINE (Ref # 11005)	11005-1493	1
LINER-CYLINDER (Ref # 11007)	11007-1086	4
GASKET,CYLINDER BASE (Ref # 11009)	11009-1578	1
PISTON-ENGINE,STD (Ref # 13001)	13001-1254	4
PIN-PISTON (Ref # 13002)	13002-1003	4
RING-SET-PISTON,STD (Ref # 13008)	13008-1088	4
RING-SET-PISTON L,O/S 0.50 (Ref # 13025)	13025-1086	4
PISTON-ENGINE L,O/S 0.50 (Ref # 13029)	13029-1164	4
BOLT,6X28 (Ref # 92002)	92002-1104	4
NUT,CAP,6MM,BLACK (Ref # 92015)	92015-1170	2
RING-SNAP,PISTON PIN (Ref # 92033)	92033-1161	8
PIN,8.2X10X14 (Ref # 92043)	92043-1264	4
RING-O,66.5MM (Ref # 92055)	92055-1287	8

© 2026 Kawasaki Motors Corp., U.S.A.