2025 Vulcan S

PARTS DIAGRAM

Accessory(Passenger Seat)

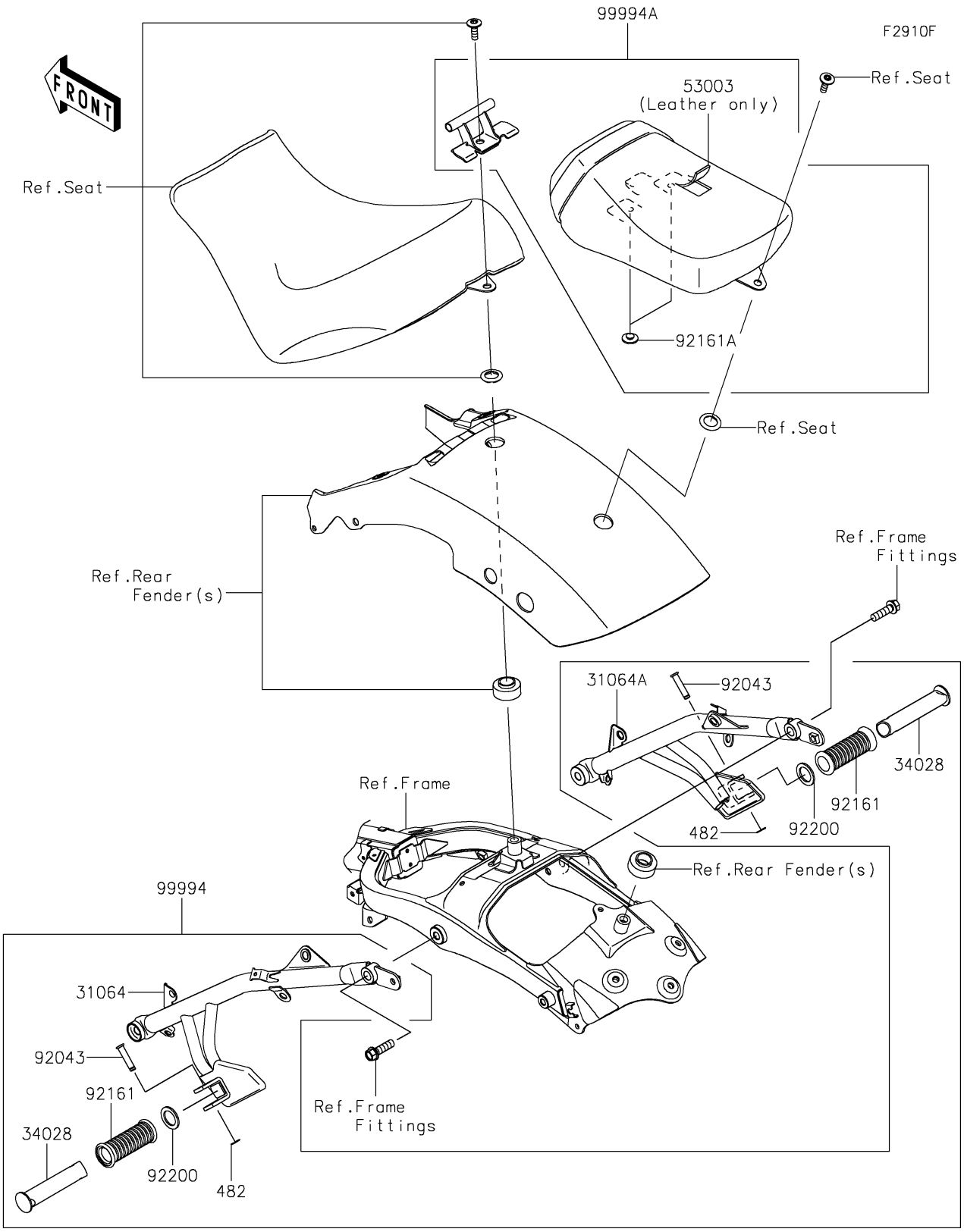

© 2026 Kawasaki Motors Corp., U.S.A.

2025 Vulcan S

PARTS LIST

Accessory(Passenger Seat)

Kawasaki
Let the Good Times Roll®

ITEM NAME	PART NUMBER	QUANTITY
PIPE-COMP,RR,LH,F.S.BLACK (Ref # 31064)	31064-0650-18R	1
PIPE-COMP,RR,RH,F.S.BLACK (Ref # 31064A)	31064-0651-18R	1
STEP,RR (Ref # 34028)	34028-0344	2
LEATHER,RR SEAT,BLACK (Ref # 53003)	53003-0568-MA	1
PIN,8X36.5 (Ref # 92043)	92043-1339	2
DAMPER,STEP (Ref # 92161)	92161-0232	2
DAMPER,8X22X10 (Ref # 92161A)	92161-1685	2
WASHER,22.5X33X2.3 (Ref # 92200)	92200-1482	2
KIT-ACCESSORY,REAR STEP (Ref # 99994)	99994-0570	1
KIT-ACCESSORY,PASSENGER SEAT (Ref # 99994A)	99994-1558	1
CIRCLIP-TYPE-E (Ref # 482)	482EA7000	2

© 2026 Kawasaki Motors Corp., U.S.A.