2025 Z125 PRO

PARTS DIAGRAM

Owner's Tools

F2810

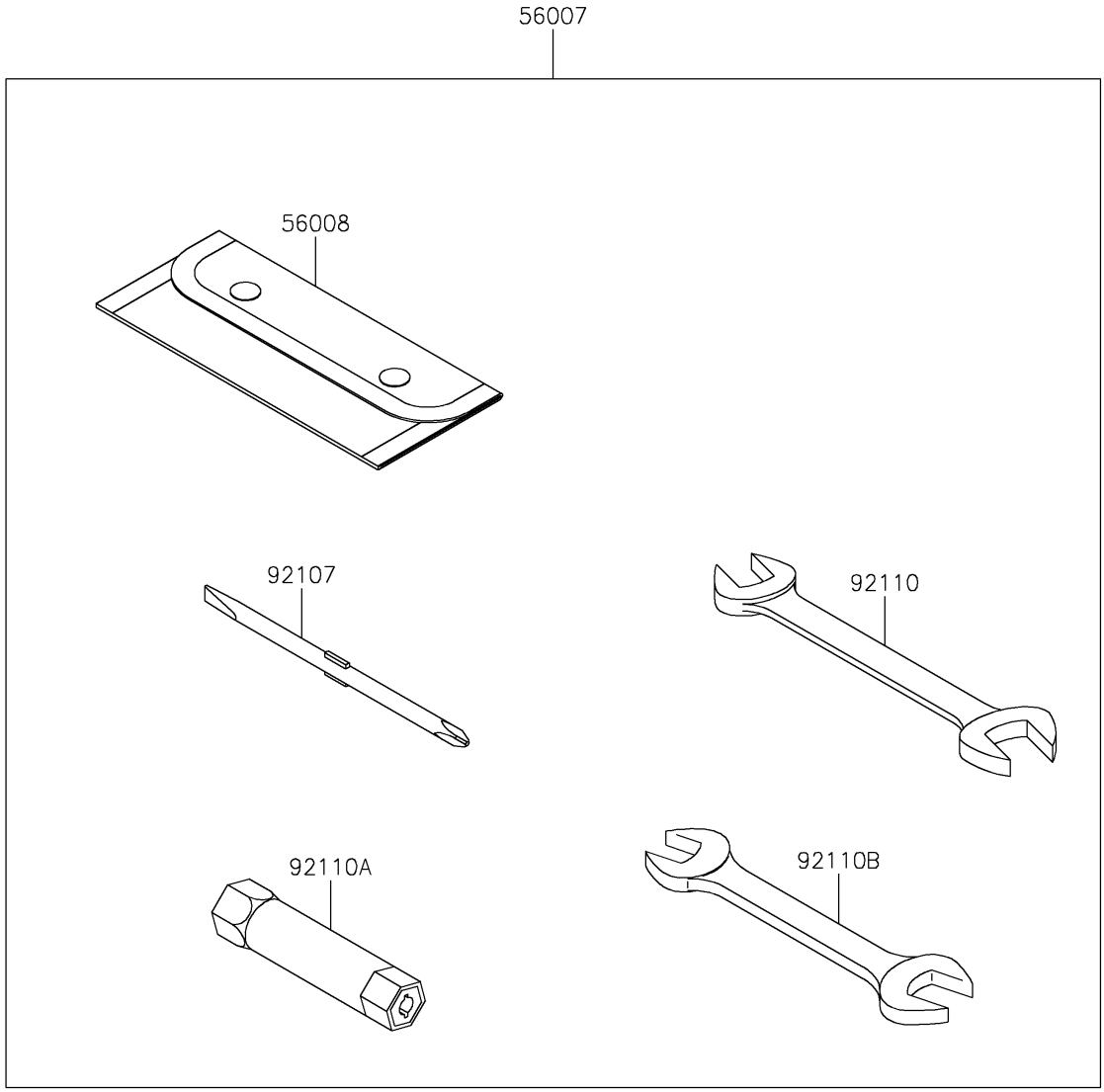

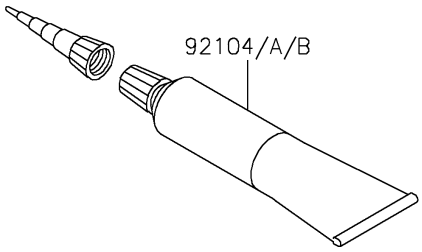

© 2026 Kawasaki Motors Corp., U.S.A.

2025 Z125 PRO

PARTS LIST

Owner's Tools

ITEM NAME	PART NUMBER	QUANTITY
TOOL-KIT (Ref # 56007)	56007-0139	1
BAG,TOOL (Ref # 56008)	56008-0564	1
GASKET-LIQUID,TB1211F,CLEAR (Ref # 92104)	92104-0004	1
GASKET-LIQUID,TB1105B,SILVER (Ref # 92104A)	92104-002	1
GASKET-LIQUID,TB1215,GRAY (Ref # 92104B)	92104-1065	1
TOOL-DRIVER,#2PHILLIPS&SLOT (Ref # 92107)	92107-0018	1
TOOL-WRENCH,OPEN END,14X17 (Ref # 92110)	92110-0057	1
TOOL-WRENCH,BOX,16MM (Ref # 92110A)	92110-0058	1
TOOL-WRENCH,OPEN END,12X14 (Ref # 92110B)	92110-0565	1

© 2026 Kawasaki Motors Corp., U.S.A.