2024 KLX150L (Indonesia Only)

PARTS DIAGRAM

Suspension/Shock Absorber

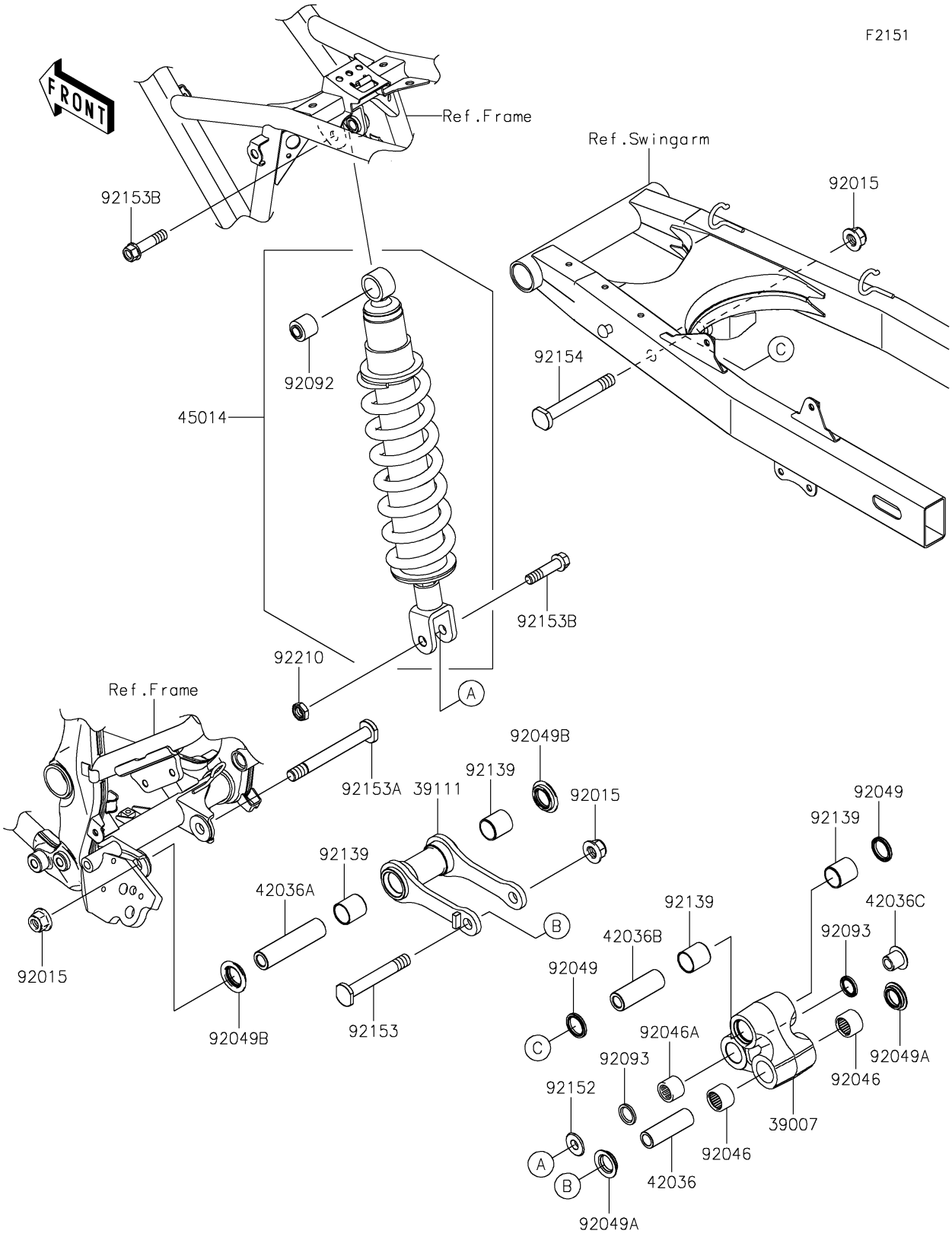

© 2026 Kawasaki Motors Corp., U.S.A.

2024 KLX150L (Indonesia Only)

PARTS LIST

Suspension/Shock Absorber

ITEM NAME	PART NUMBER	QUANTITY
ARM-SUSP (Ref # 39007)	39007-0391	1
ROD-TIE,P.SILVER (Ref # 39111)	39111-0323-458	1
SLEEVE,12.1X18X58 (Ref # 42036)	42036-0827	1
SLEEVE,12.1X20X82.6 (Ref # 42036A)	42036-0857	1
SLEEVE,12.1X20X58 (Ref # 42036B)	42036-0876	1
SLEEVE (Ref # 42036C)	42036-1351	1
SHOCKABSORBER,P.SILVER (Ref # 45014)	45014-0742-458	1
NUT,LOCK,FLANGED,12MM (Ref # 92015)	92015-1433	3
BEARING-NEEDLE,18BM2416 (Ref # 92046)	92046-1144	2
BEARING-NEEDLE,16BM2212 (Ref # 92046A)	92046-1192	1
SEAL-OIL,SDO 20 26 3 (Ref # 92049)	92049-0135	2
SEAL-OIL,18X30X5.7 (Ref # 92049A)	92049-0813	2
SEAL-OIL (Ref # 92049B)	92049-0849	2
BUSHING-RUBBER (Ref # 92092)	92092-1078	1
SEAL,SO 16 22 2.5 (Ref # 92093)	92093-0155	2
BUSHING,20X23X24 (Ref # 92139)	92139-0940	4
COLLAR (Ref # 92152)	92152-1139	1
BOLT,12X85 (Ref # 92153)	92153-1828	1
BOLT,12X108 (Ref # 92153A)	92153-1829	1
BOLT,FLANGED,10X42 (Ref # 92153B)	92153-1957	2
BOLT,12X95 (Ref # 92154)	92154-1185	1
NUT,LOCK,10MM (Ref # 92210)	92210-1184	1

© 2026 Kawasaki Motors Corp., U.S.A.