2006 Ninja® ZX™-12R (European)

PARTS DIAGRAM

Chassis Electrical Equipment

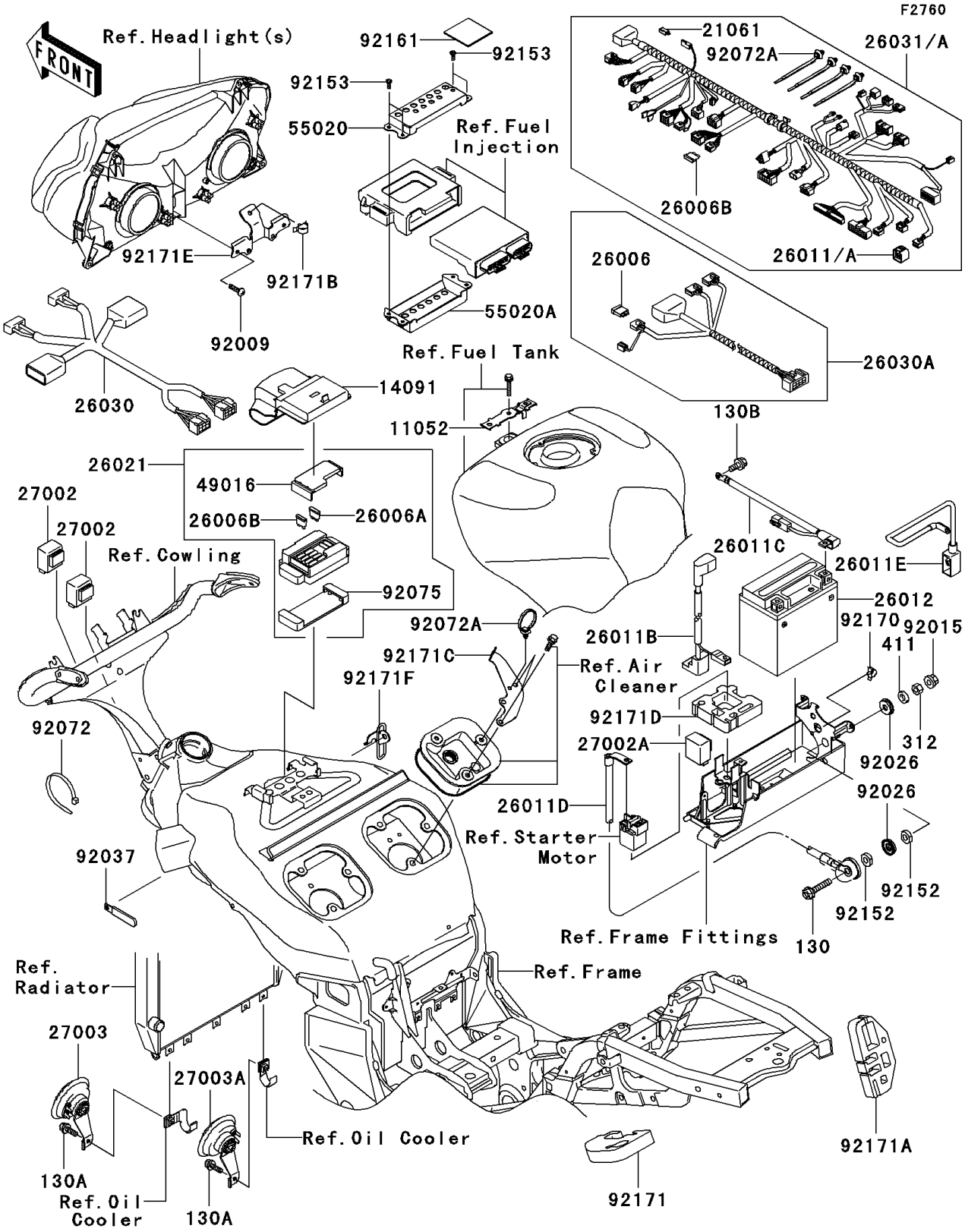

© 2026 Kawasaki Motors Corp., U.S.A.

2006 Ninja® ZX™-12R (European)

Kawasaki
Let the Good Times Roll®

PARTS LIST

Chassis Electrical Equipment

ITEM NAME	PART NUMBER	QUANTITY
BRACKET,FUSE (Ref # 11052)	11052-1830	1
COVER,JUNCTION BOX (Ref # 14091)	14091-1499	1
RECTIFIER (Ref # 21061)	21061-0001	1
FUSE,30A-G (Ref # 26006)	26006-1006	1
FUSE,10A-R (Ref # 26006A)	26006-1068	6
FUSE,15A (Ref # 26006B)	26006-1075	4
WIRE-LEAD,BATTERY(+) (Ref # 26011B)	26011-1730	1
WIRE-LEAD,BATTERY(-) (Ref # 26011C)	26011-1731	1
WIRE-LEAD,SUB (Ref # 26011D)	26011-1762	1
WIRE-LEAD,(+),JUMP START (Ref # 26011E)	26011-1772	1
BATTERY,YTX14-BS,12V 12AH (Ref # 26012)	26012-1334	1
JUNCTION BOX (Ref # 26021)	26021-1106	1
HARNESS,FR (Ref # 26030)	26030-1779	1
HARNESS,SUB (Ref # 26030A)	26030-1959	1
RELAY-ASSY (Ref # 27002)	27002-1086	2
RELAY-ASSY,TURN SIGNAL (Ref # 27002A)	27002-1101	1
HORN,LH (Ref # 27003)	27003-1418	1
HORN,RH (Ref # 27003A)	27003-1419	1
COVER-SEAL,FUSE (Ref # 49016)	49016-1177	1
GUARD,ECU (Ref # 55020)	55020-0115	1
GUARD,ECU (Ref # 55020A)	55020-0116	1
SCREW,TAPPING,5X14 (Ref # 92009)	92009-1197	2
NUT,FLANGED,6MM (Ref # 92015)	92015-1367	1
SPACER (Ref # 92026)	92026-1575	2
CLAMP,HARNESS,L=100 (Ref # 92037)	92037-1636	1
BAND,L=202 (Ref # 92072)	92072-1195	1
BAND (Ref # 92072A)	92072-1414	5
DAMPER,JUNCTION BOX (Ref # 92075)	92075-1688	1
COLLAR (Ref # 92152)	92152-1252	2

© 2026 Kawasaki Motors Corp., U.S.A.

2006 Ninja® ZX™-12R (European)

PARTS LIST

Chassis Electrical Equipment

ITEM NAME	PART NUMBER	QUANTITY
SCREW-PAN OUN-SIDE,5X12 (Ref # 92153)	92153-0781	4
DAMPER (Ref # 92161)	92161-0180	1
CLAMP,HARNESS (Ref # 92170)	92170-1494	1
BOLT-FLANGED,6X30 (Ref # 130)	130H0630	1
BOLT-FLANGED,6X12 (Ref # 130A)	130J0612	2
BOLT-FLANGED,6X10 (Ref # 130B)	130V0610	1
NUT-HEX (Ref # 312)	312H0600	1
WASHER-PLAIN,6MM (Ref # 411)	411E0600	1
CLAMP,HARNESS (Ref # 92171)	92171-0375	1
CLAMP,HARNESS (Ref # 92171A)	92171-1256	1
CLAMP,HARNESS (Ref # 92171B)	92171-1269	1
CLAMP,HARNESS (Ref # 92171C)	92171-1371	1
CLAMP,HARNESS (Ref # 92171D)	92171-1459	1
CLAMP,HEAD LAMP COUPLER (Ref # 92171E)	92171-1481	1
CLAMP,HARNESS&CABLE (Ref # 92171F)	92171-1486	1
WIRE-LEAD (Ref # 26011)	26011-0036	1
WIRE-LEAD (Ref # 26011A)	26011-0037	1
HARNESS,MAIN (Ref # 26031)	26031-0134	1
HARNESS,MAIN (Ref # 26031A)	26031-0135	1

© 2026 Kawasaki Motors Corp., U.S.A.