2006 Ninja® ZX™-12R (European)

Kawasaki
Let the Good Times Roll®

PARTS DIAGRAM

Oil Pump

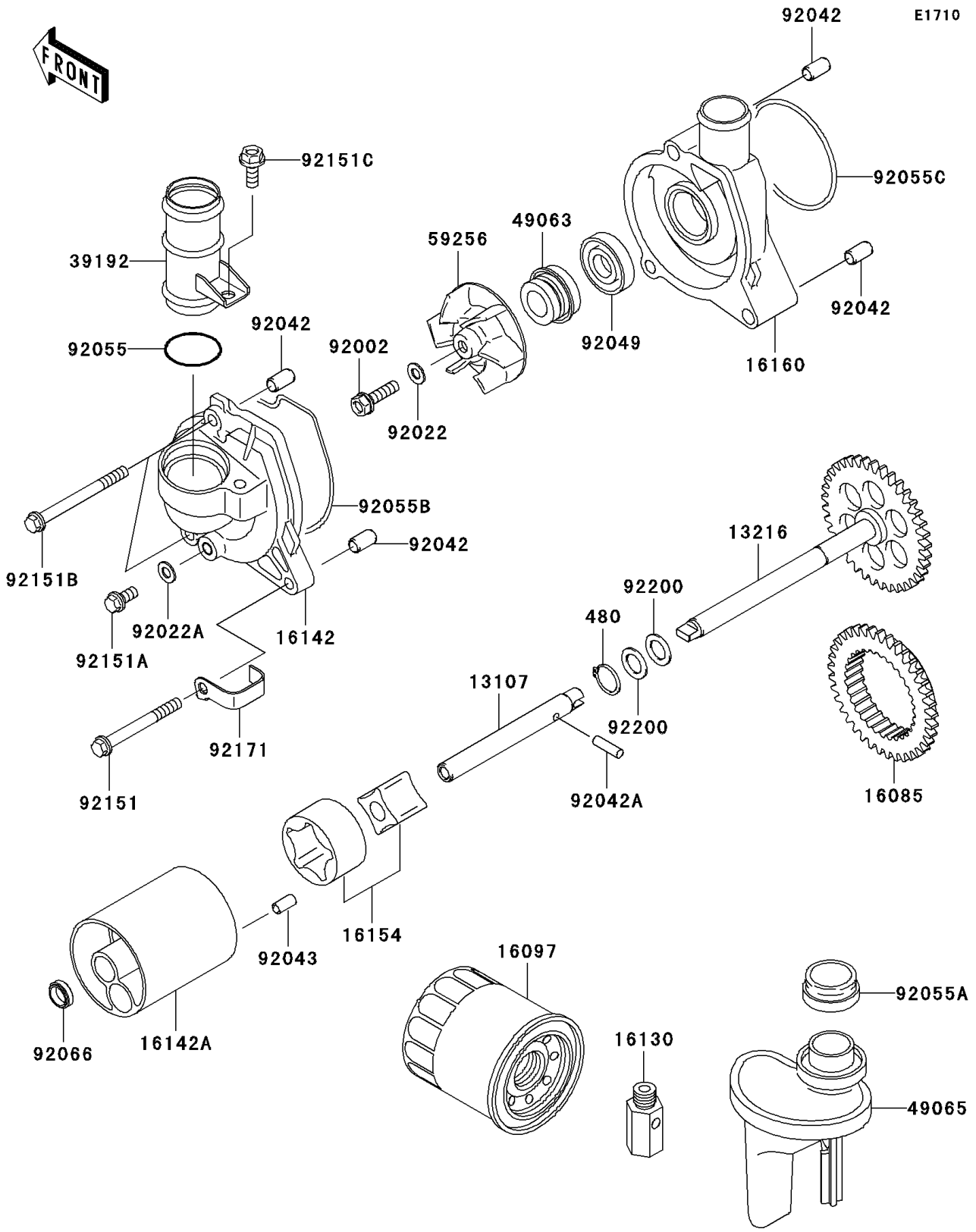

© 2026 Kawasaki Motors Corp., U.S.A.

2006 Ninja® ZX™-12R (European)

Kawasaki
Let the Good Times Roll®

PARTS LIST

Oil Pump

ITEM NAME	PART NUMBER	QUANTITY
CIRCLIP-TYPE-C,11MM (Ref # 480)	480J1100	1
SHAFT,PUMP,LH (Ref # 13107)	13107-1419	1
GEAR-COMP,PUMP,RH (Ref # 13216)	13216-1183	1
GEAR (Ref # 16085)	16085-1326	1
FILTER-ASSY-OIL (Ref # 16097)	16097-0002	1
VALVE-ASSY-RELIEF (Ref # 16130)	16130-1058	1
COVER-PUMP,WATER (Ref # 16142)	16142-0016	1
COVER-PUMP,OIL (Ref # 16142A)	16142-1168	1
ROTOR-PUMP (Ref # 16154)	16154-1133	1
BODY,WATER PUMP (Ref # 16160)	16160-1324	1
PIPE-WATER (Ref # 39192)	39192-1128	1
SEAL-MECHANICAL,WATER (Ref # 49063)	49063-1055	1
FILTER-OIL (Ref # 49065)	49065-1084	1
IMPELLER (Ref # 59256)	59256-0001	1
BOLT,6X22 (Ref # 92002)	92002-1154	1
WASHER,6.1X12X1 (Ref # 92022)	92022-077	1
WASHER,6.2X11X1 (Ref # 92022A)	92022-304	1
PIN,DOWEL,6.3X8X14 (Ref # 92042)	92042-007	4
PIN,DOWEL,4X15.8 (Ref # 92042A)	92042-014	1
PIN,4.2X6X12 (Ref # 92043)	92043-1262	1
SEAL-OIL,SC 11 28.55 5 (Ref # 92049)	92049-1336	1
RING-O,27.6X3.2 (Ref # 92055)	92055-1328	1
RING-O,OIL FILTER (Ref # 92055A)	92055-1503	1
RING-O,WATER PUMP COVER (Ref # 92055B)	92055-1602	1
RING-O,59.6X2.4 (Ref # 92055C)	92055-3018	1
PLUG (Ref # 92066)	92066-1537	1
BOLT,6X55 (Ref # 92151)	92151-1132	1
BOLT,6X12 (Ref # 92151A)	92151-1133	1
BOLT,6X65 (Ref # 92151B)	92151-1199	2

© 2026 Kawasaki Motors Corp., U.S.A.

2006 Ninja® ZX™-12R (European)

PARTS LIST

Oil Pump

ITEM NAME	PART NUMBER	QUANTITY
BOLT,FLANGED,6X16 (Ref # 92151C)	92151-1774	1
CLAMP (Ref # 92171)	92171-1179	1
WASHER (Ref # 92200)	92200-1009	2

© 2026 Kawasaki Motors Corp., U.S.A.