2004 Ninja® ZX™-12R

PARTS DIAGRAM

Starter Motor

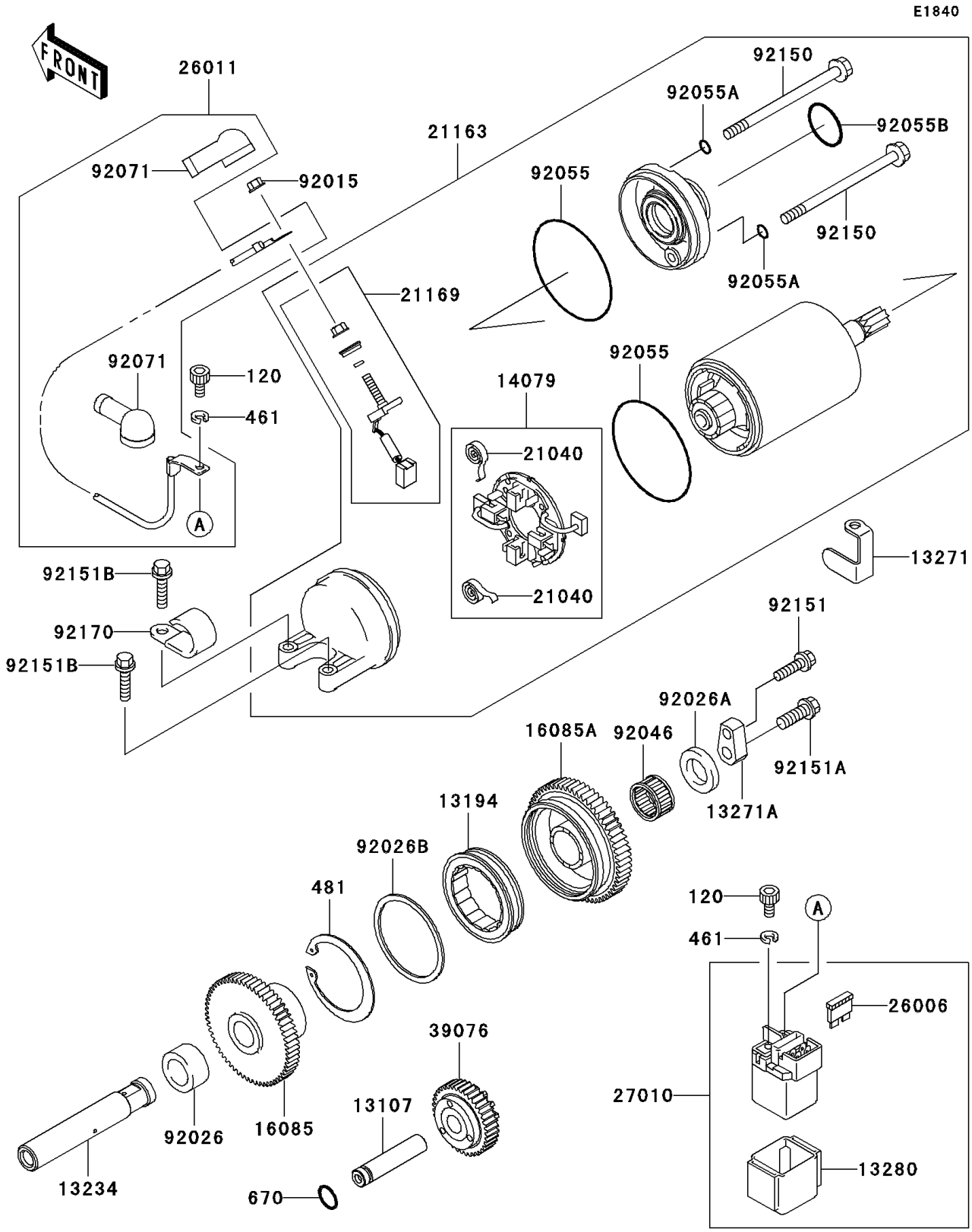

© 2026 Kawasaki Motors Corp., U.S.A.

2004 Ninja® ZX™-12R

PARTS LIST

Starter Motor

ITEM NAME	PART NUMBER	QUANTITY
BOLT-SOCKET (Ref # 120)	120S0510	2
WASHER-SPRING,5MM,BLACK (Ref # 461)	461K0500	2
CIRCLIP (Ref # 481)	481J6200	1
O RING,9MM (Ref # 670)	670D1509	1
SHAFT (Ref # 13107)	13107-1422	1
CLUTCH-ONEWAY (Ref # 13194)	13194-1111	1
SHAFT-COMP (Ref # 13234)	13234-1114	1
PLATE (Ref # 13271)	13271-1231	1
PLATE (Ref # 13271A)	13271-1639	1
HOLDER (Ref # 13280)	13280-1263	1
HOLDER-ASSY,STARTER (Ref # 14079)	14079-0009	1
GEAR (Ref # 16085)	16085-1328	1
GEAR (Ref # 16085A)	16085-1343	1
SPRING-BRUSH (Ref # 21040)	21040-1051	2
STARTER-ELECTRIC (Ref # 21163)	21163-1302	1
TERMINAL,STARTER (Ref # 21169)	21169-1058	1
FUSE,30A-G (Ref # 26006)	26006-1006	1
WIRE-LEAD (Ref # 26011)	26011-1749	1
SWITCH,MAGNETIC (Ref # 27010)	27010-1446	1
LIMITER (Ref # 39076)	39076-1074	1
NUT (Ref # 92015)	92015-1623	1
SPACER,LH (Ref # 92026)	92026-1541	1
SPACER,RH (Ref # 92026A)	92026-1542	1
SPACER,ONEWAY CLUTCH (Ref # 92026B)	92026-1550	1
BEARING-NEEDLE (Ref # 92046)	92046-1288	1
RING-O,62MM (Ref # 92055)	92055-1260	2
RING-O,4.5MM (Ref # 92055A)	92055-1261	2
RING-O,24.4MM (Ref # 92055B)	92055-1262	1
GROMMET,STARTER TERMINAL (Ref # 92071)	92071-1120	2

© 2026 Kawasaki Motors Corp., U.S.A.

2004 Ninja® ZX™-12R

PARTS LIST

Starter Motor

ITEM NAME	PART NUMBER	QUANTITY
BOLT (Ref # 92150)	92150-1237	2
BOLT,6X22 (Ref # 92151)	92151-1411	1
BOLT,8X22 (Ref # 92151A)	92151-1543	1
BOLT,6X25 (Ref # 92151B)	92151-1930	2
CLAMP,HARNESS (Ref # 92170)	92170-1900	1

© 2026 Kawasaki Motors Corp., U.S.A.