2023 Z650

PARTS DIAGRAM

Cylinder Head Cover

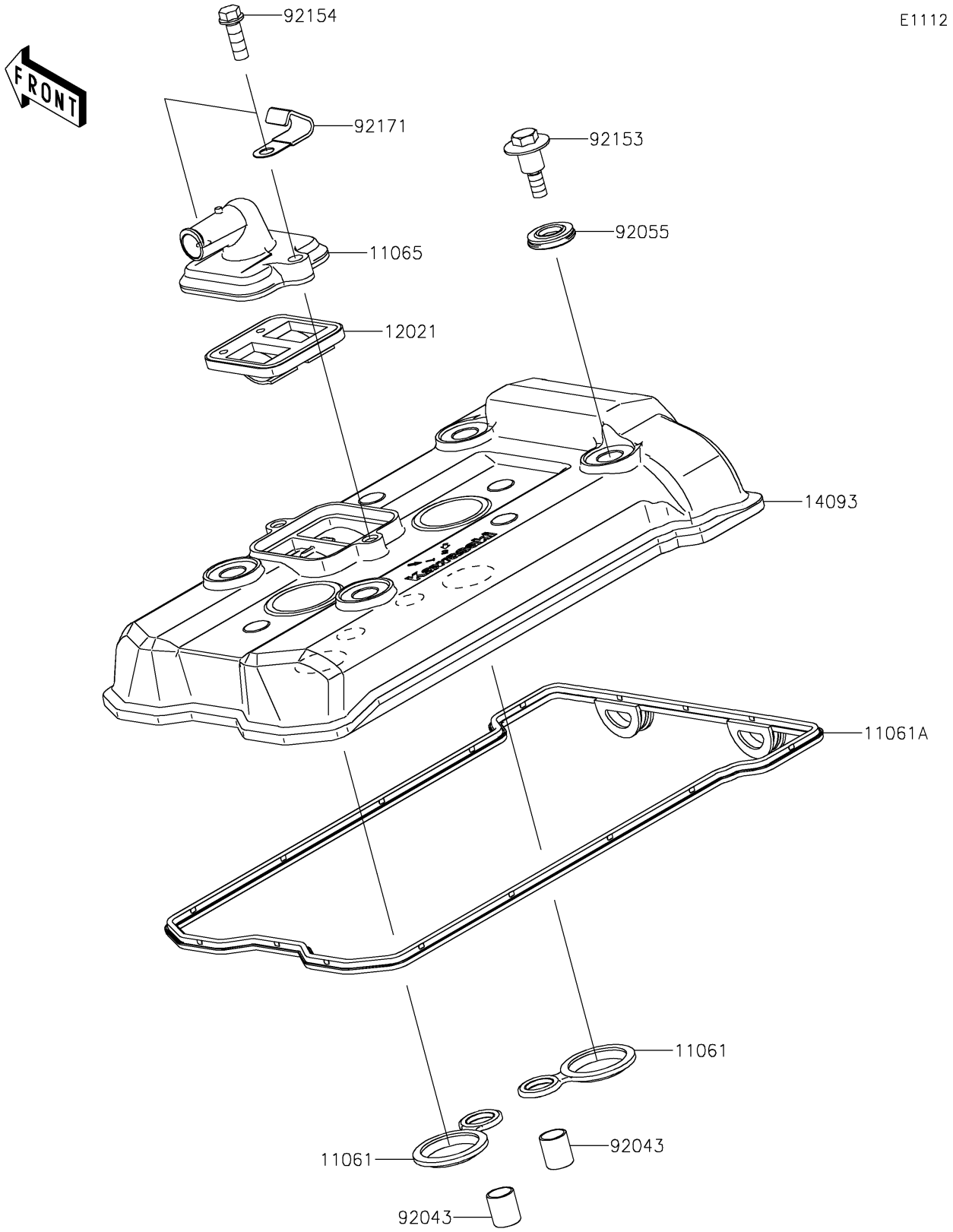

© 2026 Kawasaki Motors Corp., U.S.A.

2023 Z650

PARTS LIST

Cylinder Head Cover

Kawasaki
Let the Good Times Roll®

ITEM NAME	PART NUMBER	QUANTITY
GASKET,SPARK PLUG HOLE (Ref # 11061)	11061-0105	2
GASKET,HEAD COVER (Ref # 11061A)	11061-1184	1
CAP (Ref # 11065)	11065-1320	1
VALVE-ASSY-REED (Ref # 12021)	12021-0708	1
COVER,HEAD (Ref # 14093)	14093-0501	1
PIN,10.1X12X14 (Ref # 92043)	92043-4009	2
RING-O (Ref # 92055)	92055-0187	4
BOLT,HEAD COVER (Ref # 92153)	92153-0793	4
BOLT,FLANGED,6X18 (Ref # 92154)	92154-1775	2
CLAMP (Ref # 92171)	92171-0813	1

© 2026 Kawasaki Motors Corp., U.S.A.