2025 Z650

PARTS DIAGRAM

Accessory(U-Lock Bracket etc.)

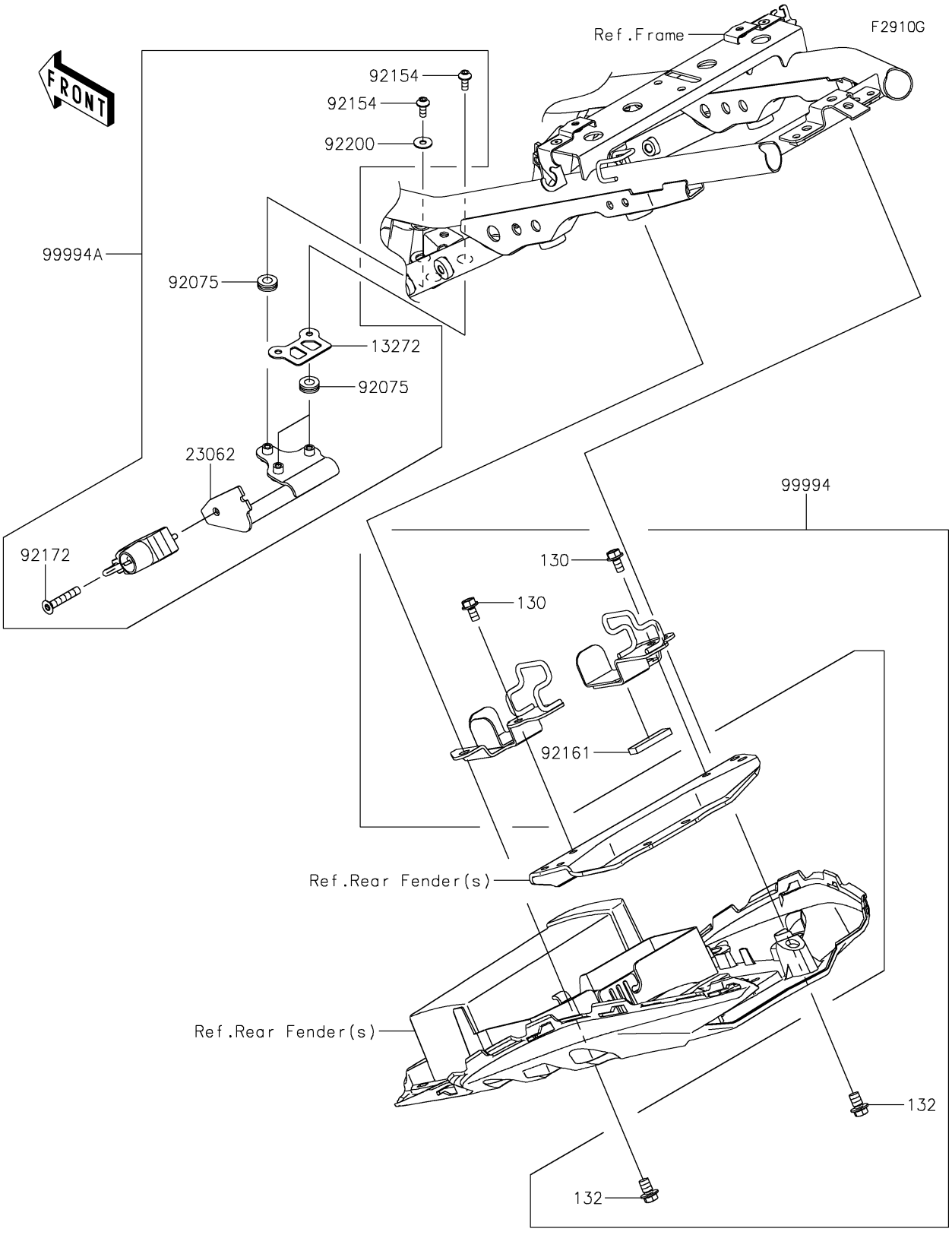

© 2026 Kawasaki Motors Corp., U.S.A.

2025 Z650

PARTS LIST

Accessory(U-Lock Bracket etc.)

ITEM NAME	PART NUMBER	QUANTITY
PLATE (Ref # 13272)	13272-2967	1
BRACKET-COMP (Ref # 23062)	23062-1288	1
DAMPER (Ref # 92075)	92075-161	3
BOLT,SOCKET,5X12 (Ref # 92154)	92154-0917	3
DAMPER,TANK COVER (Ref # 92161)	92161-0804	1
SCREW,HEXLOBE,6X35 (Ref # 92172)	92172-0835	1
WASHER,5.2X15X1.0 (Ref # 92200)	92200-0456	1
KIT-ACC,BRACKET FOR U-LOCK (Ref # 99994)	99994-0985	1
HELMET LOCK (Ref # 99994A)	99994-1831	1
BOLT-FLANGED,6X12 (Ref # 130)	130BA0612	2
BOLT-FLANGED-SMALL (Ref # 132)	132BA0812	2

© 2026 Kawasaki Motors Corp., U.S.A.