2023 KLR®650 S

PARTS DIAGRAM

Radiator

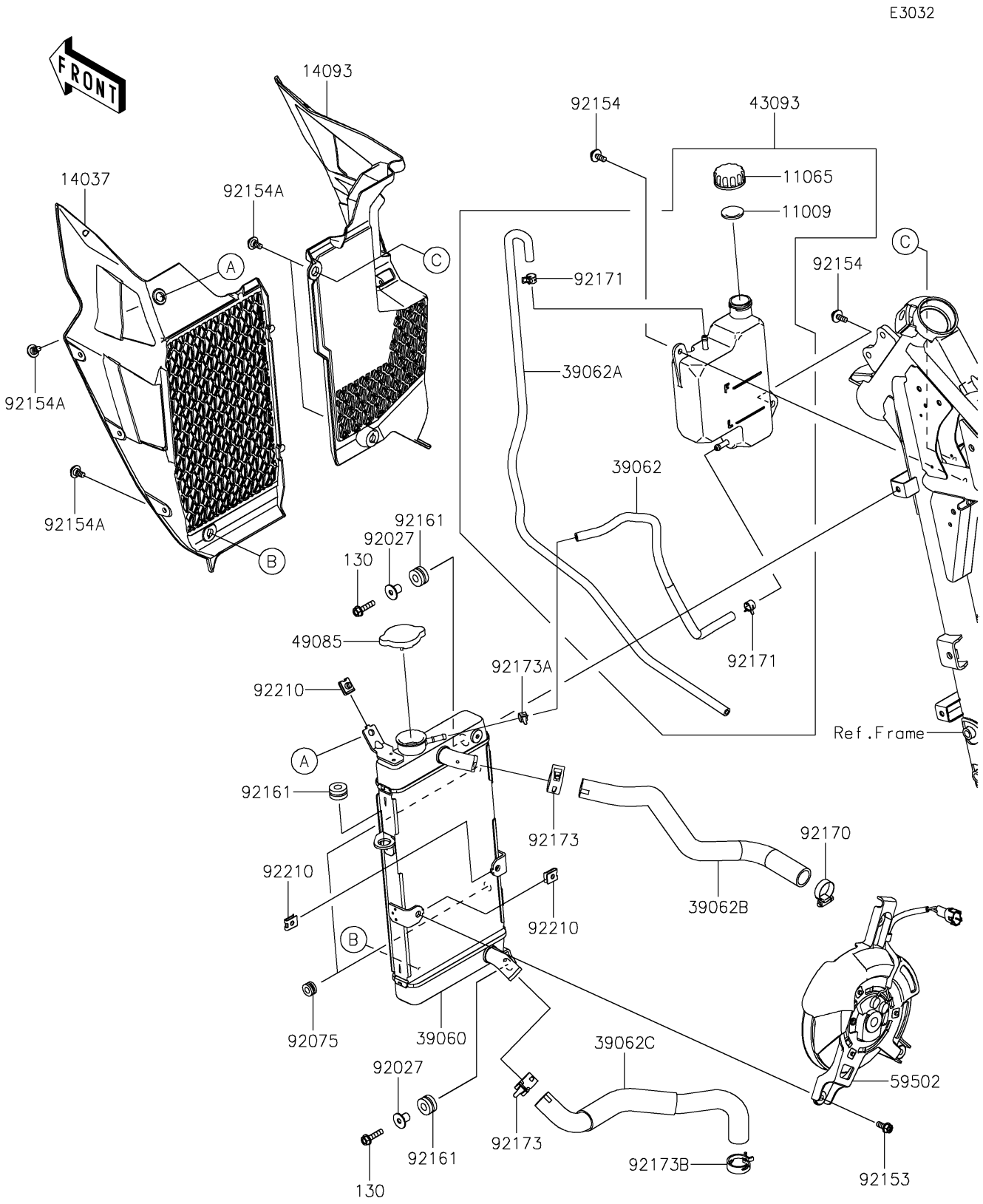

© 2026 Kawasaki Motors Corp., U.S.A.

2023 KLR®650 S

PARTS LIST

Radiator

ITEM NAME	PART NUMBER	QUANTITY
GASKET,RESERVOIR TANK CAP (Ref # 11009)	11009-1145	1
CAP (Ref # 11065)	11065-0969	1
SCREEN,RADIATOR (Ref # 14037)	14037-0821	1
COVER,RH (Ref # 14093)	14093-1070	1
RADIATOR (Ref # 39060)	39060-0744	1
HOSE-COOLING,RAD-RESERVOIR (Ref # 39062)	39062-0922	1
HOSE-COOLING,OVERFLOW (Ref # 39062A)	39062-0923	1
HOSE-COOLING,HEAD-RADIATOR (Ref # 39062B)	39062-0924	1
HOSE-COOLING,W/PUMP-RADIATOR (Ref # 39062C)	39062-0925	1
RESERVOIR-ASSY-TANK (Ref # 43093)	43093-0010	1
CAP-ASSY-PRESSURE (Ref # 49085)	49085-0006	1
FAN-ASSY (Ref # 59502)	59502-0632	1
COLLAR,6.5X10X14.1 (Ref # 92027)	92027-1183	2
DAMPER (Ref # 92075)	92075-1912	2
BOLT (Ref # 92153)	92153-0531	3
BOLT,6X16 (Ref # 92154)	92154-0391	2
BOLT,FLANGED,6X9 (Ref # 92154A)	92154-0546	4
DAMPER (Ref # 92161)	92161-1755	3
CLAMP,COOLING HOSE (Ref # 92170)	92170-1033	1
CLAMP,10.5X8X0.7 (Ref # 92171)	92171-1992	2
CLAMP (Ref # 92173)	92173-1567	2
CLAMP (Ref # 92173A)	92173-2425	1
CLAMP (Ref # 92173B)	92173-2459	1
NUT (Ref # 92210)	92210-1323	3
BOLT-FLANGED,6X25 (Ref # 130)	130BA0625	2

© 2026 Kawasaki Motors Corp., U.S.A.