2023 KLR®650 S

PARTS DIAGRAM

Cylinder Head Cover

E1112

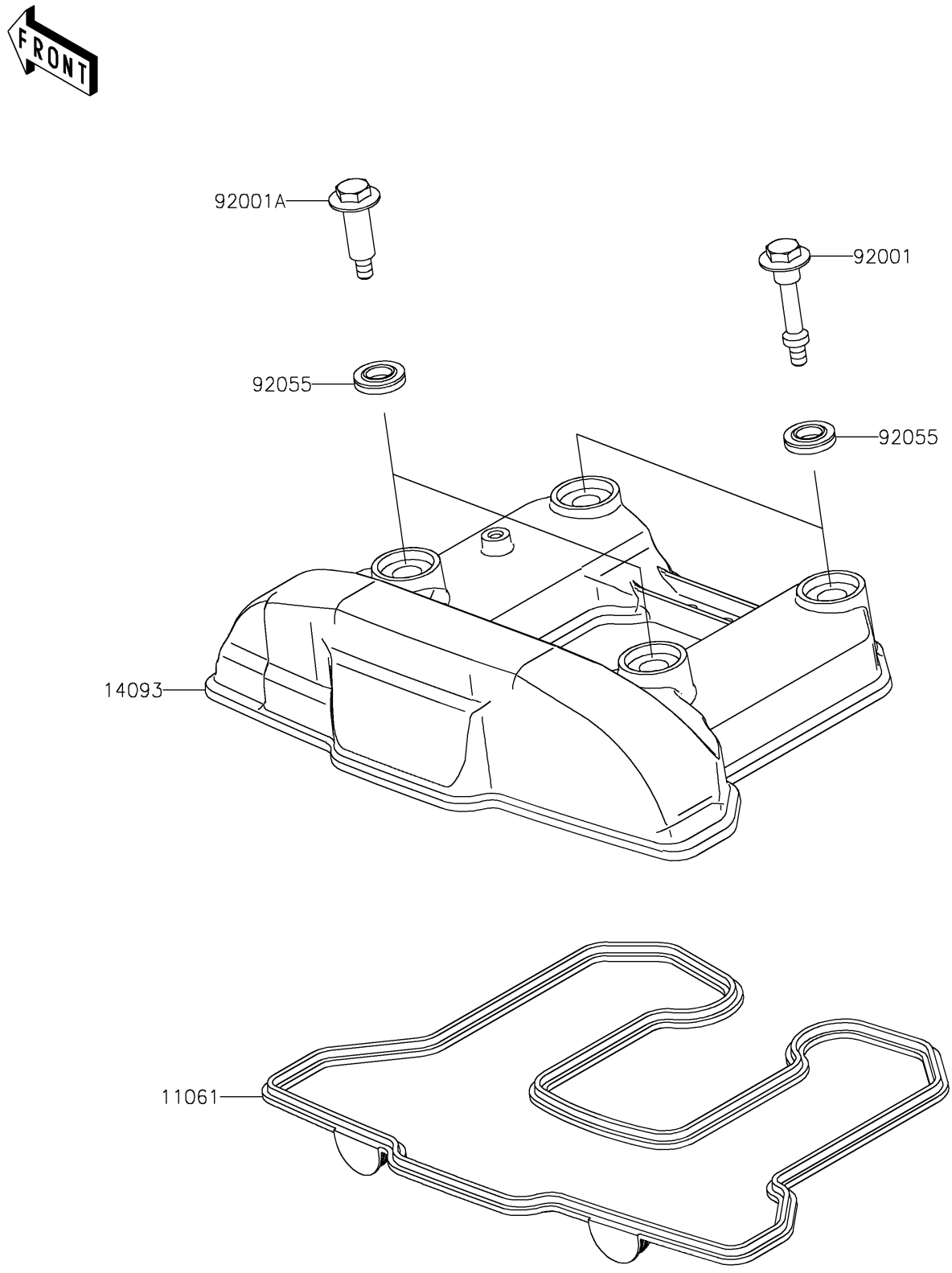

© 2026 Kawasaki Motors Corp., U.S.A.

2023 KLR®650 S

PARTS LIST

Cylinder Head Cover

ITEM NAME	PART NUMBER	QUANTITY
GASKET,HEAD COVER (Ref # 11061)	11061-1390	1
COVER,HEAD (Ref # 14093)	14093-0059	1
BOLT,L=46.5 (Ref # 92001)	92001-1853	2
BOLT,L=34.5 (Ref # 92001A)	92001-1854	2
RING-O (Ref # 92055)	92055-0143	4

© 2026 Kawasaki Motors Corp., U.S.A.