# 2023 VULCAN® S

## PARTS DIAGRAM

### Accessory(Fender Strut Cover)

F2910J

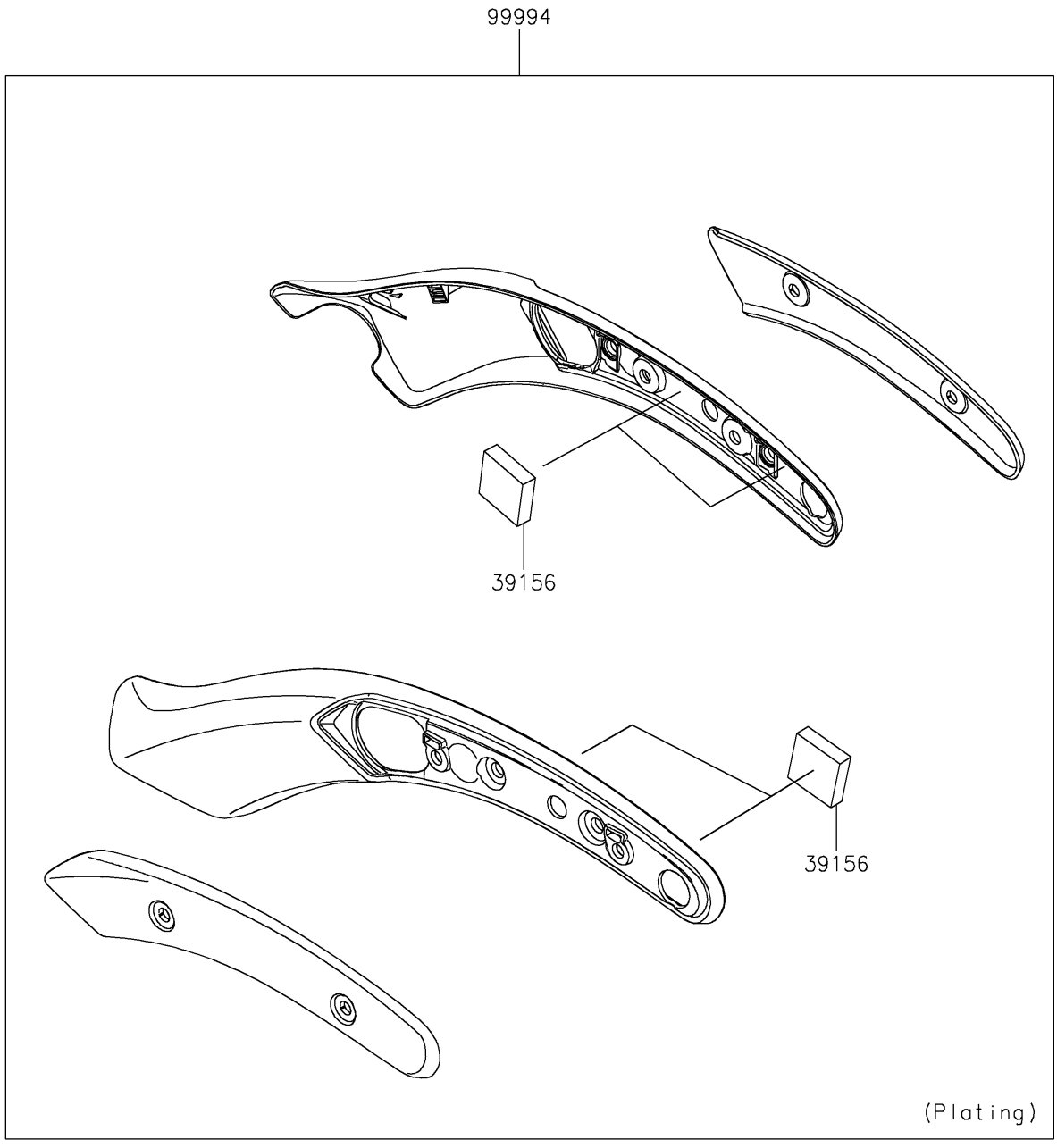


© 2026 Kawasaki Motors Corp., U.S.A.

# 2023 VULCAN® S

## PARTS LIST

### Accessory(Fender Strut Cover)

| ITEM NAME | PART NUMBER | QUANTITY |
|---|---|---|
| PAD,35X35X10 (Ref # 39156) | 39156-1901 | 4 |
| KIT.,FENDER STRUT COVER (Ref # 99994) | 99994-0535 | 1 |

© 2026 Kawasaki Motors Corp., U.S.A.