2023 VULCAN® S

PARTS DIAGRAM

Labels

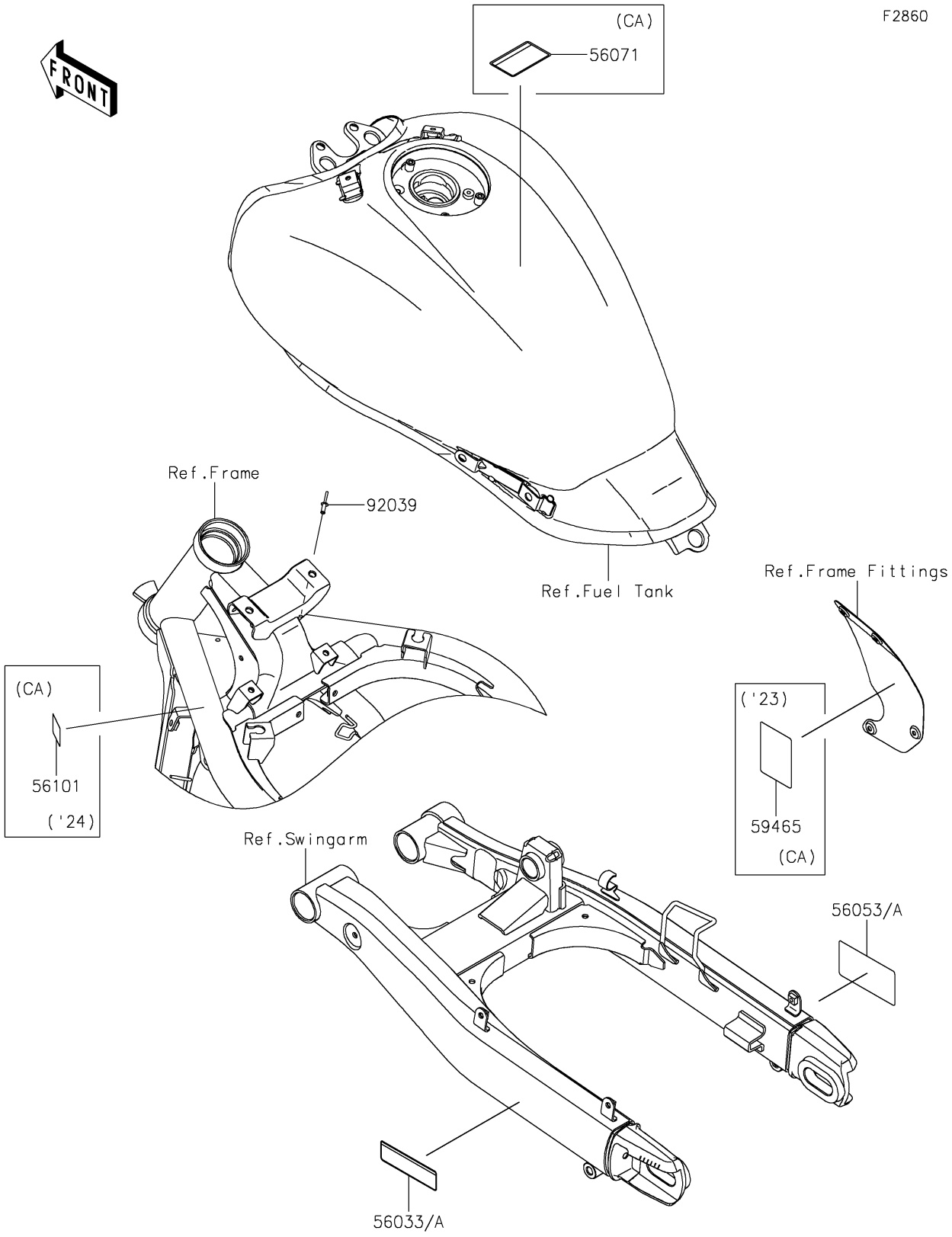

© 2026 Kawasaki Motors Corp., U.S.A.

2023 VULCAN® S

PARTS LIST

Labels

ITEM NAME	PART NUMBER	QUANTITY
LABEL-MANUAL,CHAIN (Ref # 56033)	56033-0911	1
LABEL-MANUAL,CHAIN (Ref # 56033A)	56033-0912	1
LABEL-SPECIFICATION,TIRE&LOAD (Ref # 56053)	56053-1364	1
LABEL-SPECIFICATION,TIRE&LOAD (Ref # 56053A)	56053-1370	1
LABEL-WARNING,EVAPO (Ref # 56071)	56071-0158	1
LABEL-CERTIFICATION (Ref # 59465)	59465-1871	1
RIVET (Ref # 92039)	92039-0759	1

© 2026 Kawasaki Motors Corp., U.S.A.