2024 NINJA® ZX™-10R

PARTS DIAGRAM

Accessory(Pillion Seat Cover)

F2910A

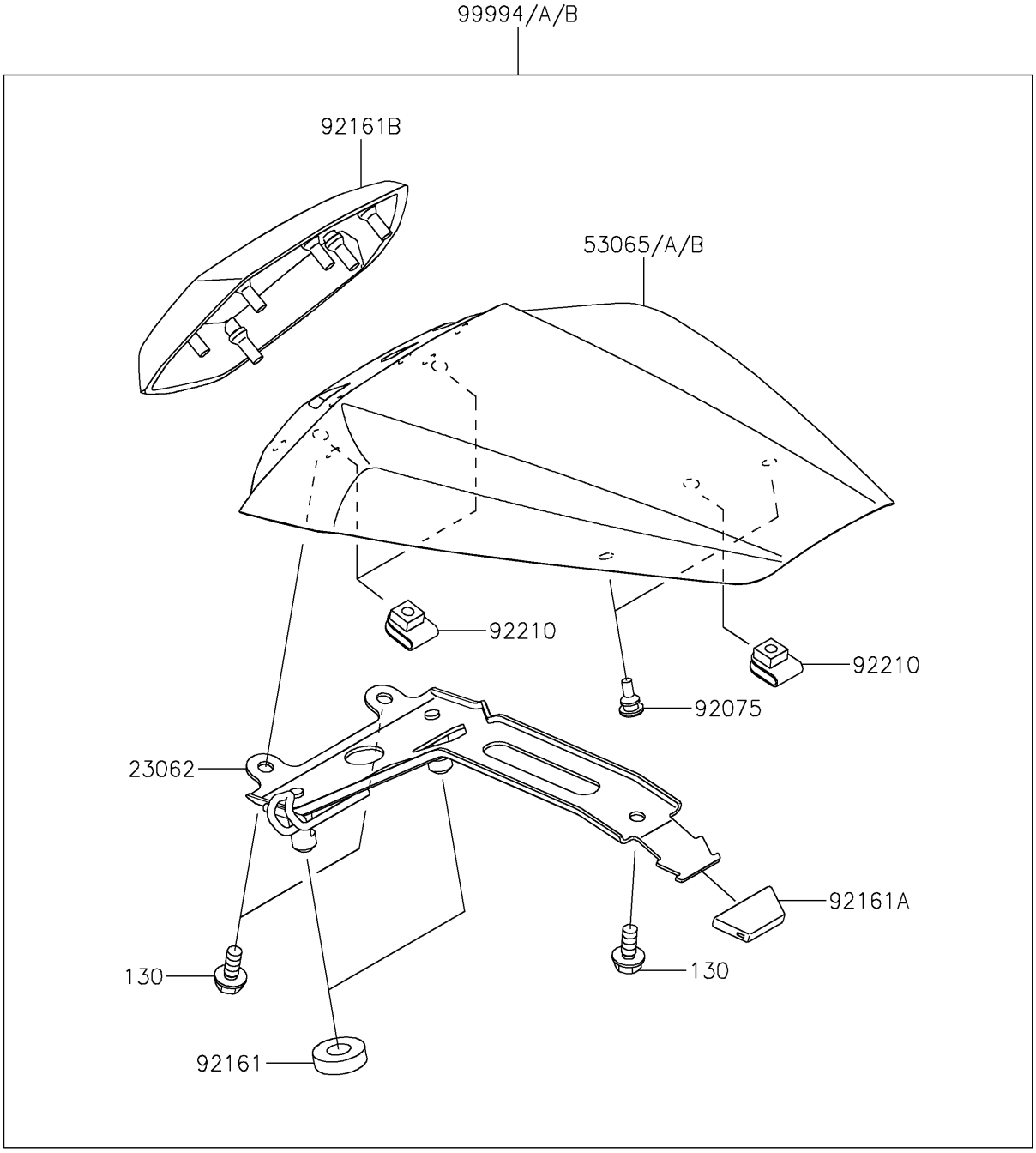

© 2026 Kawasaki Motors Corp., U.S.A.

2024 NINJA® ZX™-10R

PARTS LIST

Accessory(Pillion Seat Cover)

ITEM NAME	PART NUMBER	QUANTITY
BRACKET-COMP (Ref # 23062)	23062-1303	1
COVER SEAT,M.D.BLACK (Ref # 53065)	53065-0038-17K	1
COVER SEAT,M.F.S.BLACK (Ref # 53065A)	53065-0038-739	1
COVER SEAT,L.GREEN (Ref # 53065B)	53065-0038-777	1
DAMPER,6X10X15 (Ref # 92075)	92075-1808	2
DAMPER (Ref # 92161)	92161-0174	2
DAMPER (Ref # 92161A)	92161-0629	1
DAMPER,SEAT PAD (Ref # 92161B)	92161-1812	1
NUT,6MM (Ref # 92210)	92210-0277	3
PILLION SEAT COVER,M.D.BLACK (Ref # 99994)	99994-1484-17K	1
PILLION SEAT COVER,M.F.S.BLACK (Ref # 99994A)	99994-1484-739	1
PILLION SEAT COVER,L.GREEN (Ref # 99994B)	99994-1484-777	1
BOLT-FLANGED,6X14 (Ref # 130)	130BA0614	3

© 2026 Kawasaki Motors Corp., U.S.A.