2023 Ninja® ZX-10R

PARTS DIAGRAM

Frame Fittings

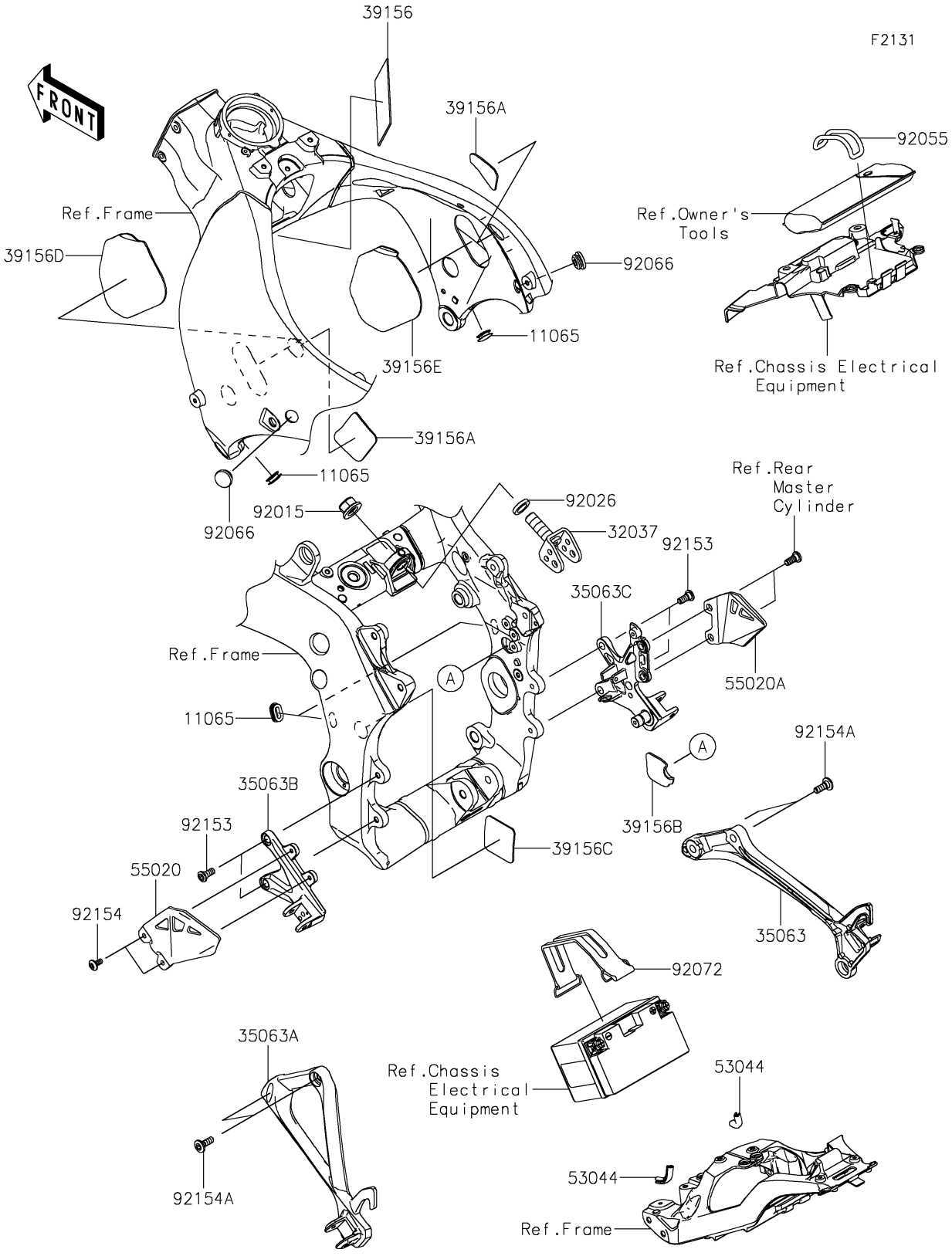

© 2026 Kawasaki Motors Corp., U.S.A.

2023 Ninja® ZX-10R

PARTS LIST

Frame Fittings

ITEM NAME	PART NUMBER	QUANTITY
CAP (Ref # 11065)	11065-0095	4
BRACKET-SHOCKABSORBER (Ref # 32037)	32037-0149	1
STAY,RR STEP,RH,F.S.BLACK (Ref # 35063)	35063-0700-18R	1
STAY,RR STEP,LH,F.S.BLACK (Ref # 35063A)	35063-0852-18R	1
STAY,FR STEP,LH,F.S.BLACK (Ref # 35063B)	35063-1521-18R	1
STAY,FR STEP,RH,F.S.BLACK (Ref # 35063C)	35063-1522-18R	1
PAD,50X115X2 (Ref # 39156)	39156-0923	1
PAD,55X55X2 (Ref # 39156A)	39156-1961	2
PAD,45X50.5X2 (Ref # 39156B)	39156-1964	1
PAD,55.5X55.5X0.5 (Ref # 39156C)	39156-2116	1
PAD,LH (Ref # 39156D)	39156-2213	1
PAD,RH (Ref # 39156E)	39156-2214	1
TRIM,L=40 (Ref # 53044)	53044-0012	2
GUARD,FR STEP,LH (Ref # 55020)	55020-0569	1
GUARD,FR STEP,RH (Ref # 55020A)	55020-1944	1
NUT,FLANGED,16MM (Ref # 92015)	92015-1316	1
SPACER,16.5X26X4.6 (Ref # 92026)	92026-0913	1
RING-O,54.6X5.7 (Ref # 92055)	92055-0881	1
PLUG,17MM (Ref # 92066)	92066-1320	2
BAND,L=168 (Ref # 92072)	92072-1306	1
BOLT,SOCKET,8X20 (Ref # 92153)	92153-1621	4
BOLT,SOCKET,6X14 (Ref # 92154)	92154-1735	2
BOLT,SOCKET,8X23 (Ref # 92154A)	92154-1968	4

© 2026 Kawasaki Motors Corp., U.S.A.