1996 GPZ 1100 ABS

PARTS DIAGRAM

Ignition System

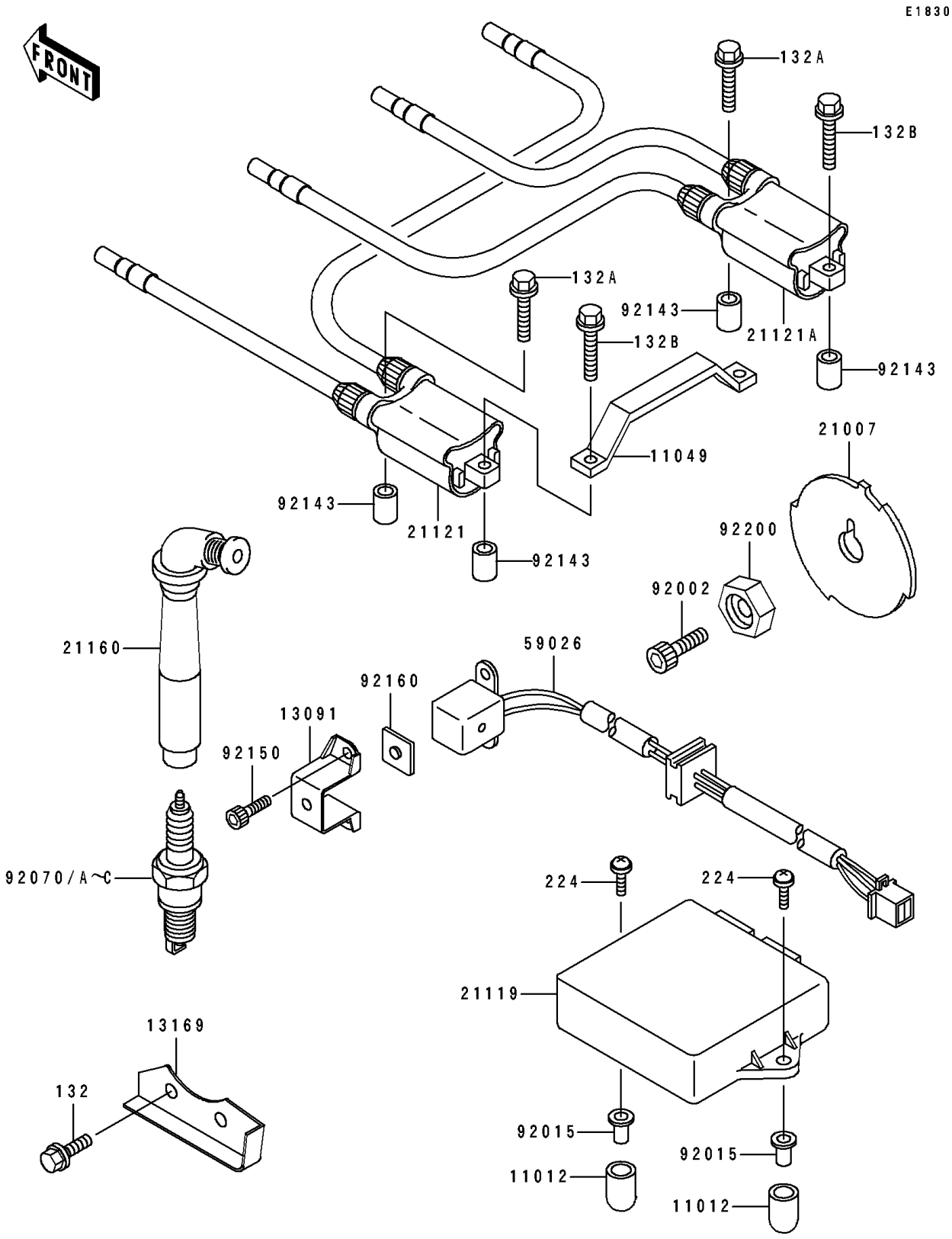

© 2026 Kawasaki Motors Corp., U.S.A.

1996 GPZ 1100 ABS

PARTS LIST

Ignition System

ITEM NAME	PART NUMBER	QUANTITY
CAP (Ref # 11012)	11012-1438	2
BRACKET,IGNITION COIL (Ref # 11049)	11049-1301	1
HOLDER (Ref # 13091)	13091-1562	1
PLATE,CHAIN GUIDE (Ref # 13169)	13169-1748	1
ROTOR,PULSING (Ref # 21007)	21007-1280	1
IGNITER (Ref # 21119)	21119-1439	1
COIL-IGNITION,#1&#4 (Ref # 21121)	21121-1243	1
COIL-IGNITION,#2&#3 (Ref # 21121A)	21121-1244	1
CAP-ASSY-PLUG (Ref # 21160)	21160-1087	4
COIL-PULSING (Ref # 59026)	59026-1132	1
BOLT,SOCKET,8X25 (Ref # 92002)	92002-1442	1
NUT (Ref # 92015)	92015-1700	2
PLUG-SPARK,CR9EK(NGK) (Ref # 92070)	92070-1145	4
PLUG-SPARK,CR8EK(NGK) (Ref # 92070A)	92070-1158	4
PLUG-SPARK,U27ETR(ND) (Ref # 92070B)		4
PLUG-SPARK,U24ETR(ND) (Ref # 92070C)		4
COLLAR (Ref # 92143)	92143-1729	4
BOLT,SOCKET,5X14 (Ref # 92150)	92150-1180	2
DAMPER (Ref # 92160)	92160-1091	1
WASHER,ROTOR (Ref # 92200)	92200-1173	1
BOLT-FLANGED-SMALL (Ref # 132)	132G0612	2
BOLT-FLANGED-SMALL (Ref # 132A)	132Y0635	2
BOLT-FLANGED-SMALL (Ref # 132B)	132Y0640	2
SCREW-PAN-WP-CROS (Ref # 224)	224C0625	2

© 2026 Kawasaki Motors Corp., U.S.A.